PROJECT TITLE

LOCATION

EXTERIOR ALUMINUM STOREFRONTS, CURTAIN WALLS, ENTRANCES & PANELS

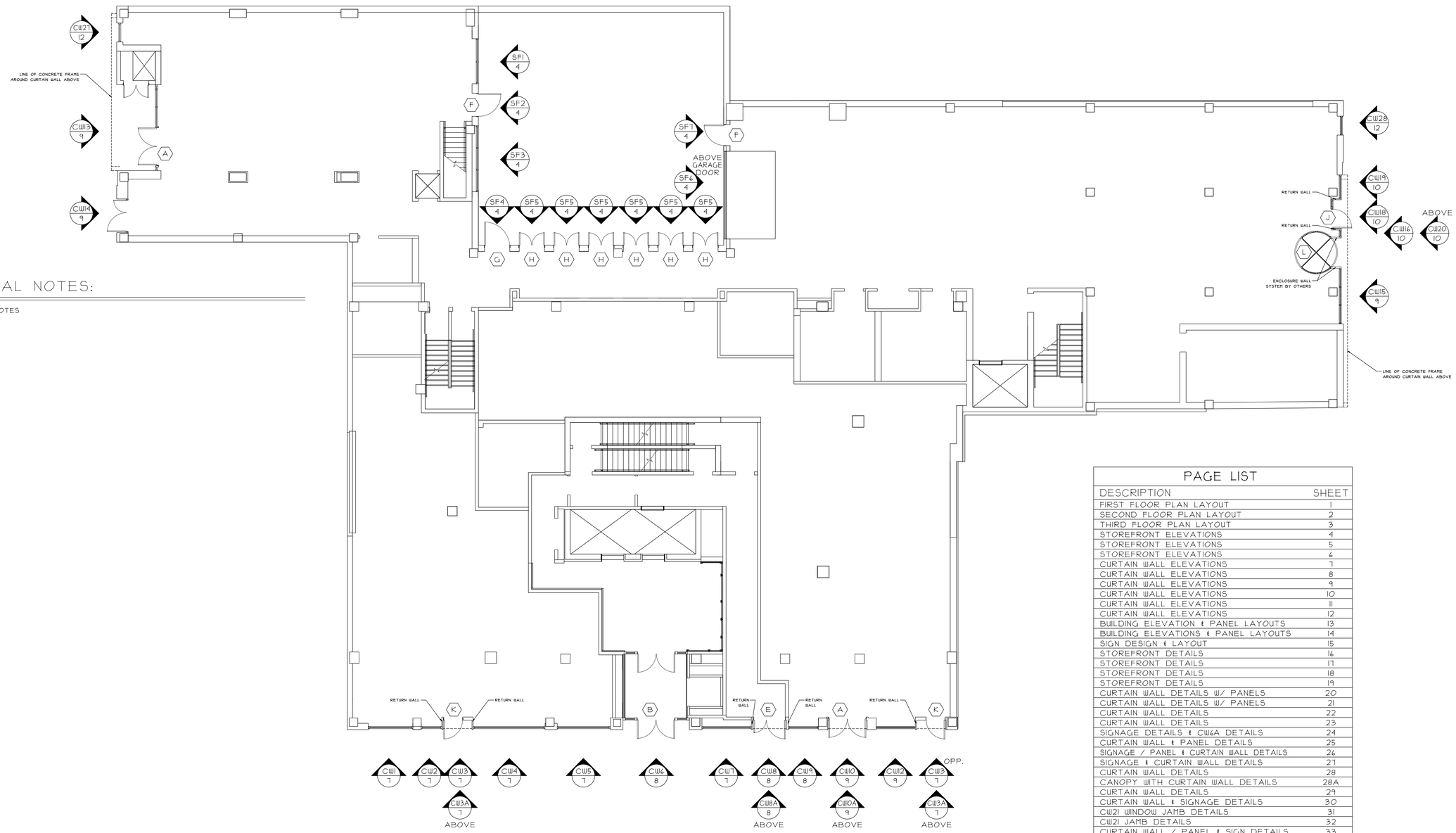

GENERAL NOTES:

1. GENERAL NOTES

FIRST FLOOR PLAN LAYOUT

REF. 1/A101

PAGE LIST

DESCRIPTION	SHEET
FIRST FLOOR PLAN LAYOUT	1
SECOND FLOOR PLAN LAYOUT	2
THIRD FLOOR PLAN LAYOUT	3
STOREFRONT ELEVATIONS	4
STOREFRONT ELEVATIONS	5
STOREFRONT ELEVATIONS	6
CURTAIN WALL ELEVATIONS	7
CURTAIN WALL ELEVATIONS	8
CURTAIN WALL ELEVATIONS	9
CURTAIN WALL ELEVATIONS	10
CURTAIN WALL ELEVATIONS	11
CURTAIN WALL ELEVATIONS	12
BUILDING ELEVATION & PANEL LAYOUTS	13
BUILDING ELEVATIONS & PANEL LAYOUTS	14
SIGN DESIGN & LAYOUT	15
STOREFRONT DETAILS	16
STOREFRONT DETAILS	17
STOREFRONT DETAILS	18
STOREFRONT DETAILS	19
CURTAIN WALL DETAILS W/ PANELS	20
CURTAIN WALL DETAILS W/ PANELS	21
CURTAIN WALL DETAILS	22
CURTAIN WALL DETAILS	23
SIGNAGE DETAILS & CW6A DETAILS	24
CURTAIN WALL & PANEL DETAILS	25
SIGNAGE / PANEL & CURTAIN WALL DETAILS	26
SIGNAGE & CURTAIN WALL DETAILS	27
CURTAIN WALL DETAILS	28
CANOPY WITH CURTAIN WALL DETAILS	28A
CURTAIN WALL DETAILS	29
CURTAIN WALL & SIGNAGE DETAILS	30
CW21 WINDOW JAMB DETAILS	31
CW21 JAMB DETAILS	32
CURTAIN WALL / PANEL & SIGN DETAILS	33
CW23 JAMB & PANEL DETAILS	34
CW24 DETAILS / F & T ANCHOR DETAILS	35
CW24 JAMB DETAILS	36
6" DEEP CURTAIN WALL DETAILS	36A
CORTEN PANEL DETAILS	37
OMEGA LITE PANEL DETAILS	38
PANEL DETAILS	39
PANEL DETAILS AT PARAPET	40
OMEGA LITE PANEL & SIGN DETAILS	41
OMEGA LITE PANEL & SIGN DETAILS	42
OMEGA LITE ANCHOR PLATE & END PANEL DETAILS	43
BESAM DOOR PLAN DETAILS	44
BESAM DOOR SECTION DETAILS	45

47 PAGES TOTAL

NORTH

REVISIONS:	DATE:

GLAZING CONTRACTOR: SAMPLE SAMPLE SAMPLE
SAMPLE SAMPLE SAMPLE
SAMPLE SAMPLE SAMPLE
SAMPLE SAMPLE SAMPLE
SAMPLE SAMPLE SAMPLE
SAMPLE SAMPLE SAMPLE

ARCHITECT: SAMPLE SAMPLE SAMPLE
SAMPLE SAMPLE SAMPLE
SAMPLE SAMPLE SAMPLE
SAMPLE SAMPLE SAMPLE
SAMPLE SAMPLE SAMPLE
SAMPLE SAMPLE SAMPLE

PROJECT: SAMPLE SAMPLE SAMPLE

LOCATION: SAMPLE SAMPLE SAMPLE

SCALE: NOT TO SCALE

DATE: SAMPLE

DRAWN: SAMPLE

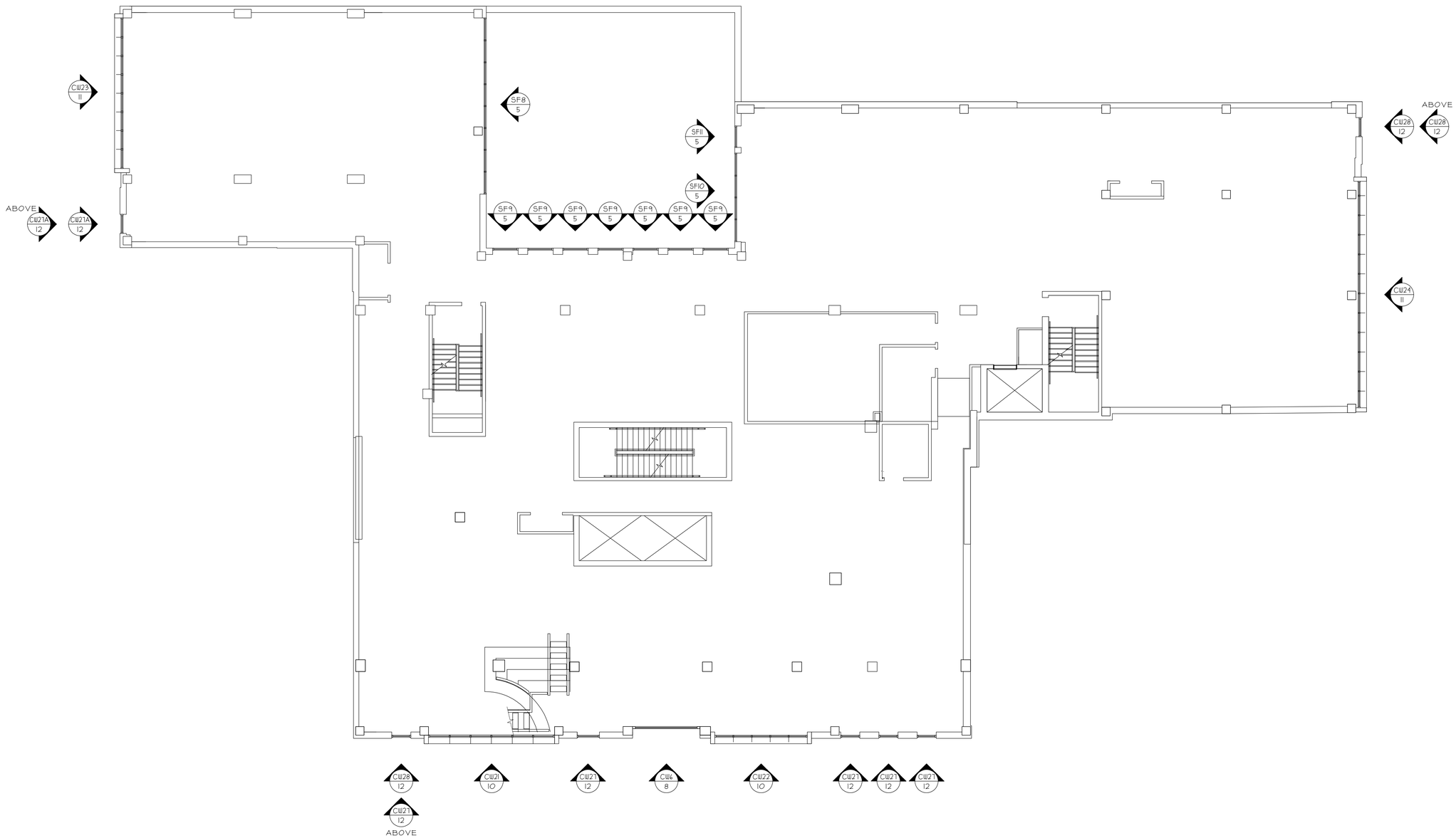

SECOND FLOOR PLAN LAYOUT

REF. 1/A102

NORTH

REVISIONS:	DATE:

GLAZING CONTRACTOR:
SAMPLE SAMPLE SAMPLE
SAMPLE SAMPLE SAMPLE
SAMPLE SAMPLE SAMPLE
SAMPLE SAMPLE SAMPLE
SAMPLE SAMPLE SAMPLE
SAMPLE SAMPLE SAMPLE

ARCHITECT:
SAMPLE SAMPLE SAMPLE
SAMPLE SAMPLE SAMPLE
SAMPLE SAMPLE SAMPLE
SAMPLE SAMPLE SAMPLE
SAMPLE SAMPLE SAMPLE
SAMPLE SAMPLE SAMPLE

PROJECT: SAMPLE SAMPLE SAMPLE

LOCATION: SAMPLE SAMPLE SAMPLE

SCALE:
NOT TO SCALE

DATE:
SAMPLE

DRAWN:
SAMPLE

PAGE:
2 of 47

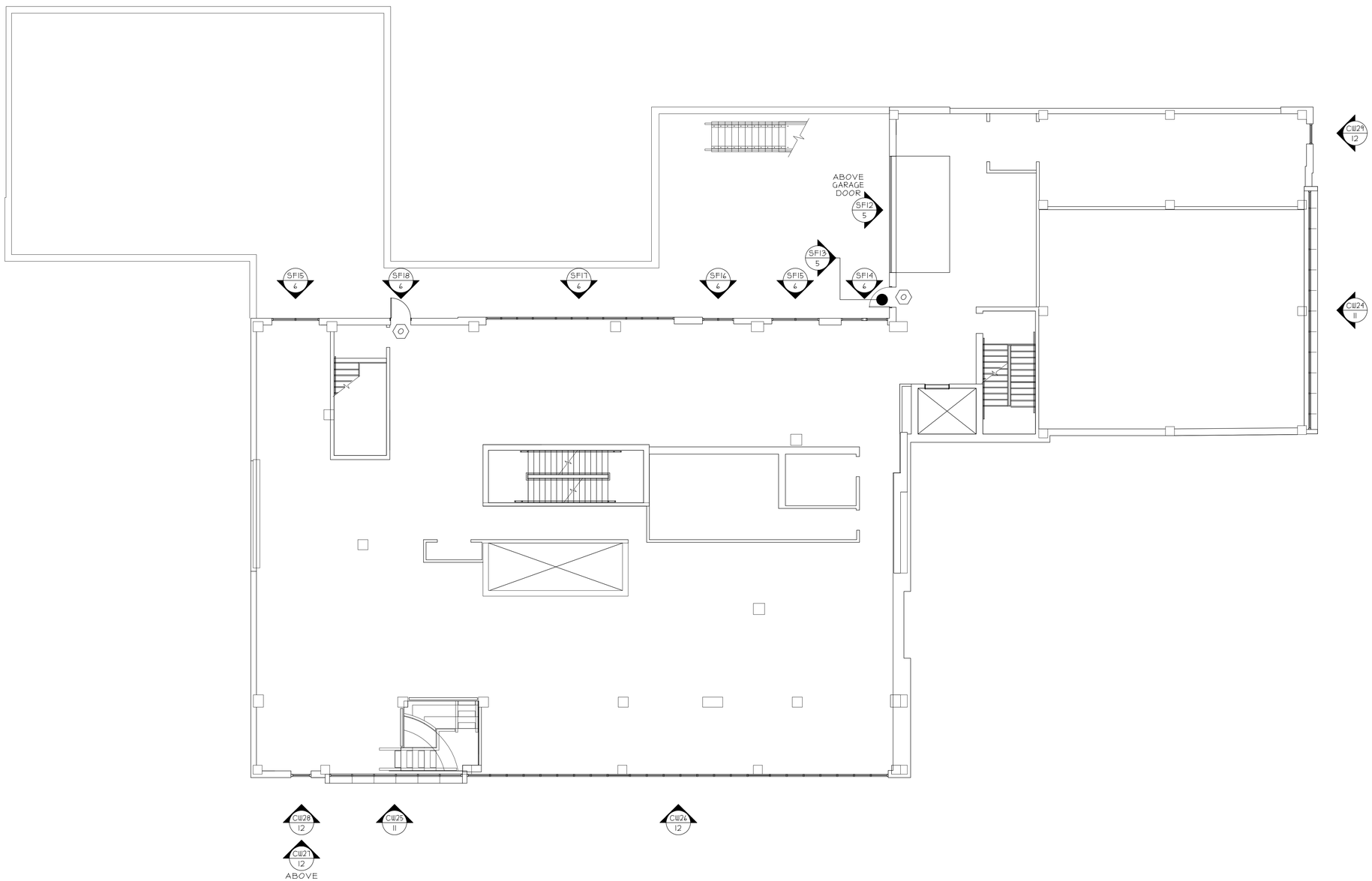

THIRD FLOOR PLAN LAYOUT

REF. 1/A103

NORTH

REVISIONS:	DATE:

GLAZING CONTRACTOR:
SAMPLE SAMPLE SAMPLE
SAMPLE SAMPLE SAMPLE
SAMPLE SAMPLE SAMPLE
SAMPLE SAMPLE SAMPLE
SAMPLE SAMPLE SAMPLE
SAMPLE SAMPLE SAMPLE

ARCHITECT:
SAMPLE SAMPLE SAMPLE
SAMPLE SAMPLE SAMPLE
SAMPLE SAMPLE SAMPLE
SAMPLE SAMPLE SAMPLE
SAMPLE SAMPLE SAMPLE
SAMPLE SAMPLE SAMPLE

PROJECT: SAMPLE SAMPLE SAMPLE

LOCATION: SAMPLE SAMPLE SAMPLE

SCALE:
NOT TO SCALE

DATE:
SAMPLE

DRAWN:
SAMPLE

PAGE:
3 of 47

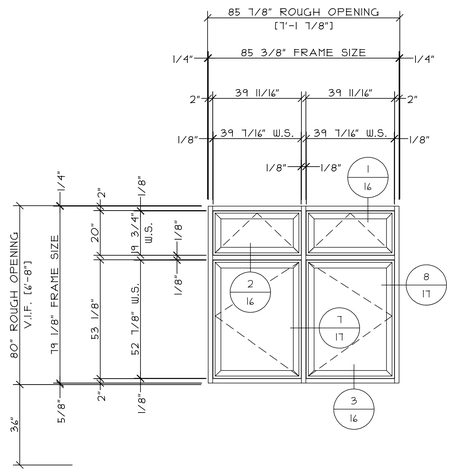

ELEVATION SF1
1 TOTAL
KAWNEER 451T STOREFRONT
(2" X 4 1/2" FRAMING) WITH
8225TL PROJECT OUT WINDOWS

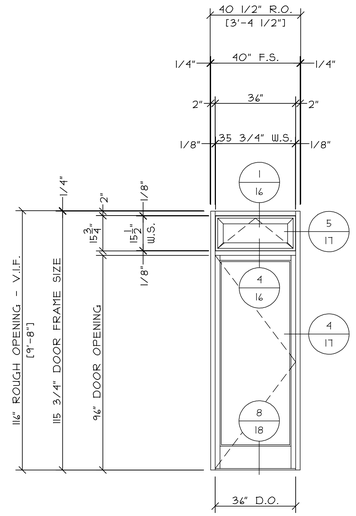

ELEVATION SF2
1 TOTAL
KAWNEER 451T STOREFRONT
(2" X 4 1/2" FRAMING) WITH
8225TL PROJECT OUT WINDOWS
NARROW STILE DOOR 'F'

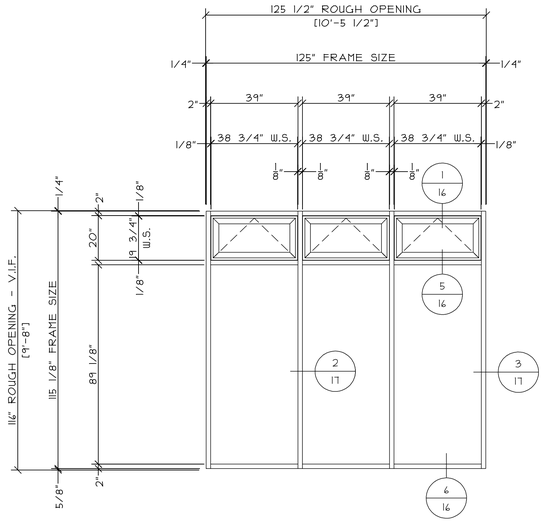

ELEVATION SF3
1 TOTAL
KAWNEER 451T STOREFRONT
(2" X 4 1/2" FRAMING) WITH
8225TL PROJECT OUT WINDOWS

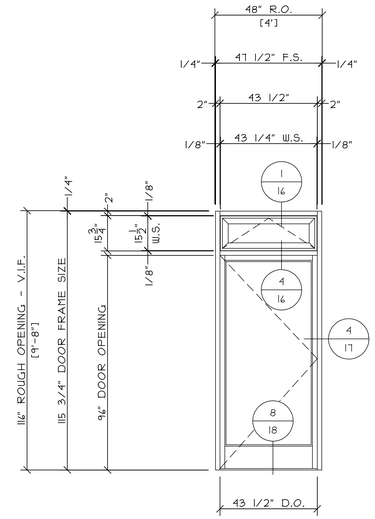

ELEVATION SF4
1 TOTAL
KAWNEER 451T STOREFRONT
(2" X 4 1/2" FRAMING) WITH
8225TL PROJECT OUT WINDOWS
NARROW STILE DOOR 'G'

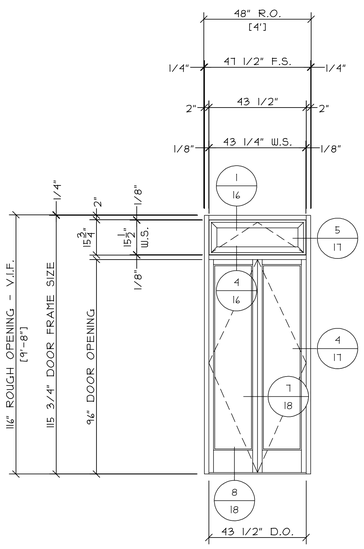

ELEVATION SF5
6 TOTAL
KAWNEER 451T STOREFRONT
(2" X 4 1/2" FRAMING) WITH
8225TL PROJECT OUT WINDOWS
NARROW STILE DOOR 'H'

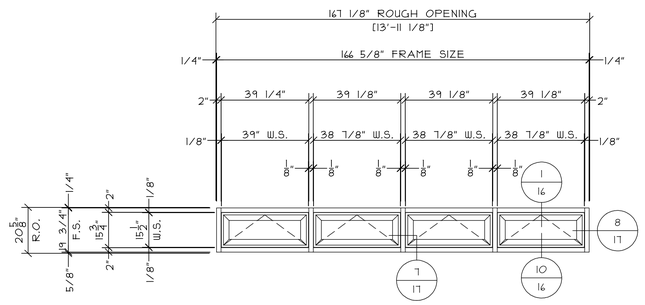

ELEVATION SF6
1 TOTAL
KAWNEER 451T STOREFRONT
(2" X 4 1/2" FRAMING) WITH
8225TL PROJECT OUT WINDOWS

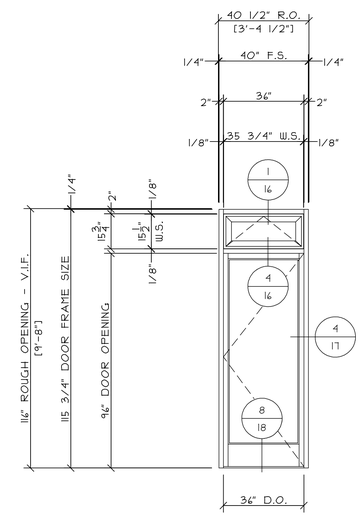

ELEVATION SF7
1 TOTAL
KAWNEER 451T STOREFRONT
(2" X 4 1/2" FRAMING) WITH
8225TL PROJECT OUT WINDOWS
NARROW STILE DOOR 'F'

REVISIONS:	DATE:

GLAZING CONTRACTOR:
SAMPLE SAMPLE SAMPLE
SAMPLE SAMPLE SAMPLE
SAMPLE SAMPLE SAMPLE
SAMPLE SAMPLE SAMPLE
SAMPLE SAMPLE SAMPLE

ARCHITECT:
SAMPLE SAMPLE SAMPLE
SAMPLE SAMPLE SAMPLE
SAMPLE SAMPLE SAMPLE
SAMPLE SAMPLE SAMPLE
SAMPLE SAMPLE SAMPLE

PROJECT: SAMPLE SAMPLE SAMPLE

LOCATION: SAMPLE SAMPLE SAMPLE

SCALE: 3/8" = 1'-0"

DATE: SAMPLE

DRAWN: SAMPLE

PAGE: 4 of 47

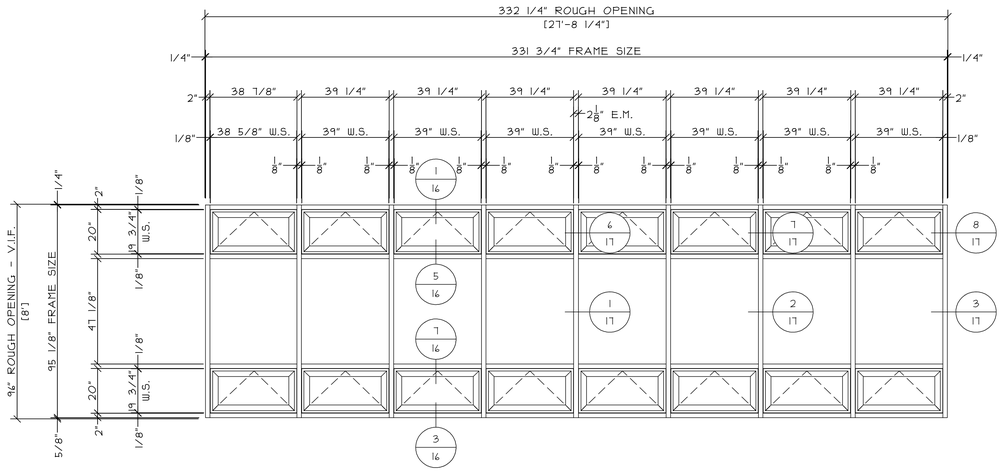

ELEVATION SF8
1 TOTAL
KAWNEER 451T STOREFRONT
(2" X 4 1/2" FRAMING) WITH
8225TL PROJECT OUT WINDOWS

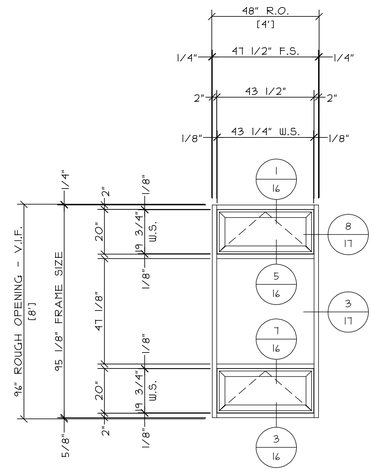

ELEVATION SF9
7 TOTAL
KAWNEER 451T STOREFRONT
(2" X 4 1/2" FRAMING) WITH
8225TL PROJECT OUT WINDOWS

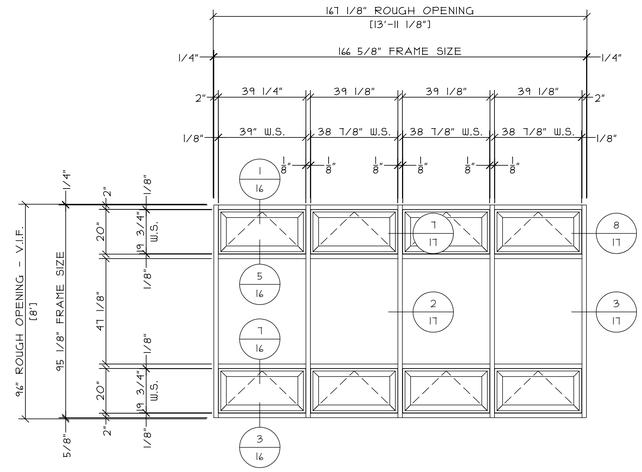

ELEVATION SF10
1 TOTAL
KAWNEER 451T STOREFRONT
(2" X 4 1/2" FRAMING) WITH
8225TL PROJECT OUT WINDOWS

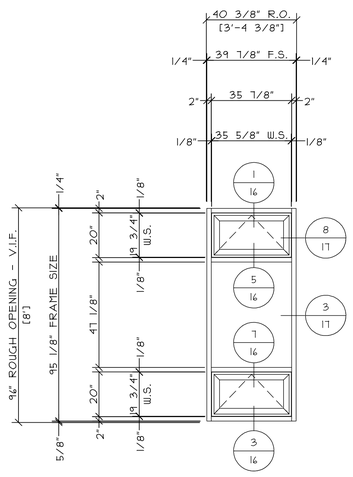

ELEVATION SF11
1 TOTAL
KAWNEER 451T STOREFRONT
(2" X 4 1/2" FRAMING) WITH
8225TL PROJECT OUT WINDOWS

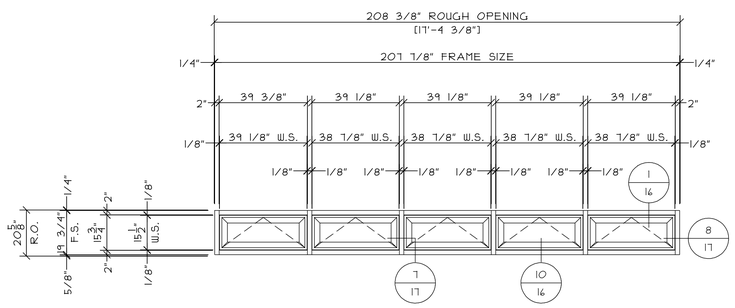

ELEVATION SF12
1 TOTAL
KAWNEER 451T STOREFRONT
(2" X 4 1/2" FRAMING) WITH
8225TL PROJECT OUT WINDOWS

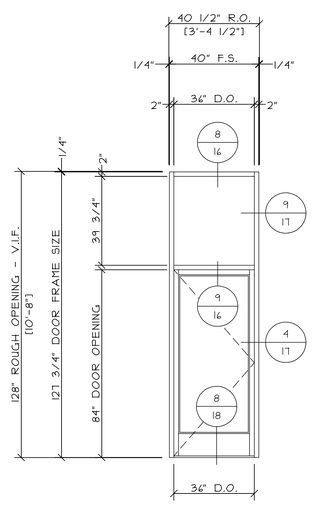

ELEVATION SF13
1 TOTAL
KAWNEER 451T STOREFRONT
(2" X 4 1/2" FRAMING) WITH
8225TL PROJECT OUT WINDOWS
NARROW STILE DOOR 'O'

REVISIONS:	DATE:

GLAZING CONTRACTOR:
SAMPLE SAMPLE SAMPLE
SAMPLE SAMPLE SAMPLE
SAMPLE SAMPLE SAMPLE
SAMPLE SAMPLE SAMPLE
SAMPLE SAMPLE SAMPLE
SAMPLE SAMPLE SAMPLE

ARCHITECT:
SAMPLE SAMPLE SAMPLE
SAMPLE SAMPLE SAMPLE
SAMPLE SAMPLE SAMPLE
SAMPLE SAMPLE SAMPLE
SAMPLE SAMPLE SAMPLE
SAMPLE SAMPLE SAMPLE

PROJECT: SAMPLE SAMPLE SAMPLE

LOCATION: SAMPLE SAMPLE SAMPLE

SCALE: 3/8" = 1'-0"

DATE: SAMPLE

DRAWN: SAMPLE

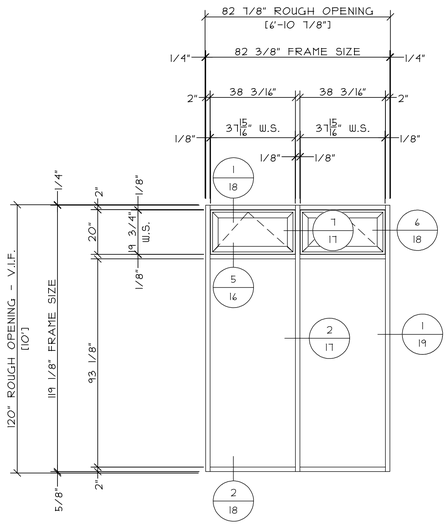

ELEVATION SF14

1 TOTAL

KAWNEER 451T STOREFRONT
(2" X 4 1/2" FRAMING) WITH
8225TL PROJECT OUT WINDOWS

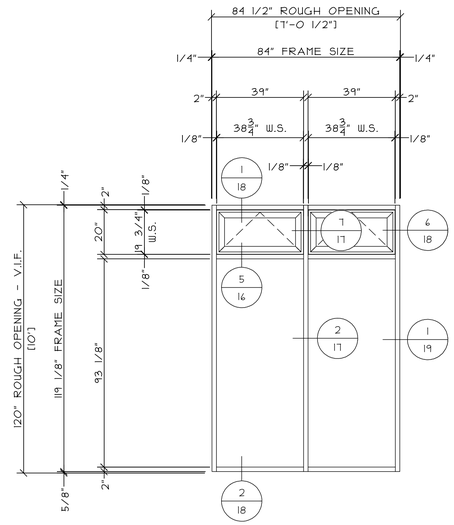

ELEVATION SF15

2 TOTAL

KAWNEER 451T STOREFRONT
(2" X 4 1/2" FRAMING) WITH
8225TL PROJECT OUT WINDOWS

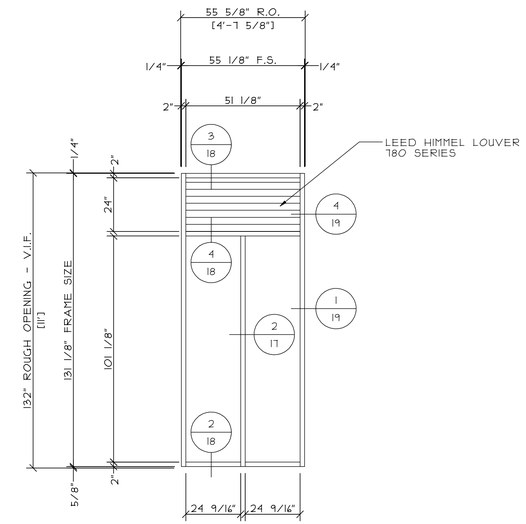

ELEVATION SF16

1 TOTAL

KAWNEER 451T STOREFRONT
(2" X 4 1/2" FRAMING)

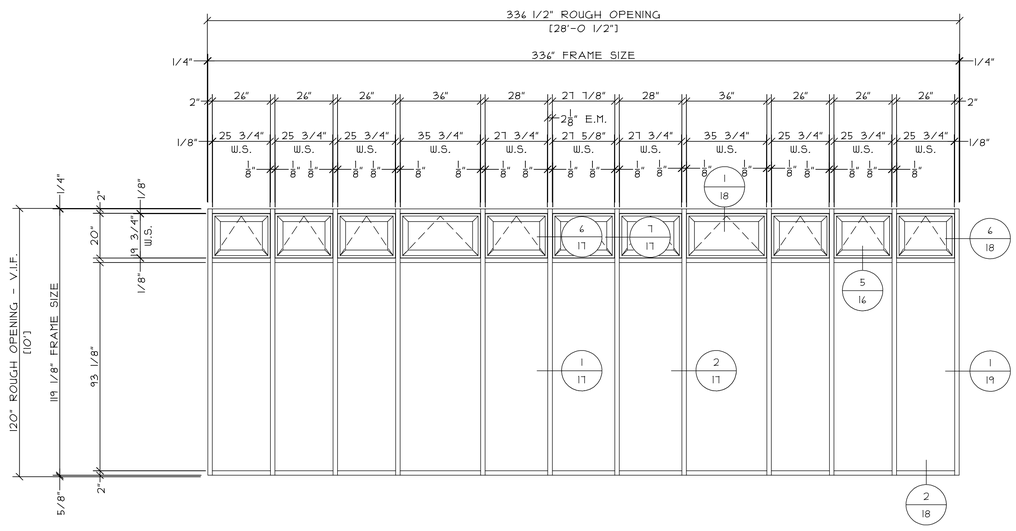

ELEVATION SF17

1 TOTAL

KAWNEER 451T STOREFRONT
(2" X 4 1/2" FRAMING) WITH
8225TL PROJECT OUT WINDOWS

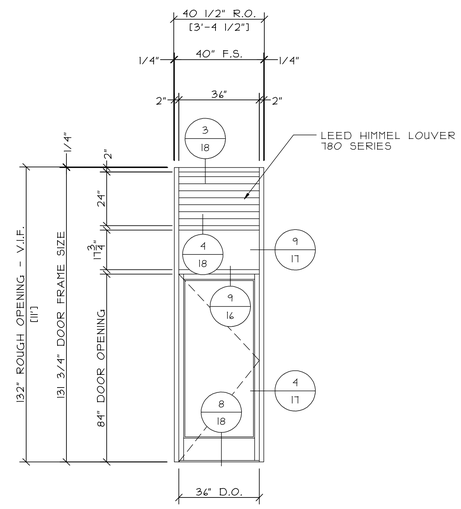

ELEVATION SF18

1 TOTAL

KAWNEER 451T STOREFRONT
(2" X 4 1/2" FRAMING)

NARROW STILE DOOR 'O'

DATE:	REVISIONS:

GLAZING CONTRACTOR:
SAMPLE SAMPLE SAMPLE
SAMPLE SAMPLE SAMPLE
SAMPLE SAMPLE SAMPLE
SAMPLE SAMPLE SAMPLE
SAMPLE SAMPLE SAMPLE
SAMPLE SAMPLE SAMPLE

ARCHITECT:
SAMPLE SAMPLE SAMPLE
SAMPLE SAMPLE SAMPLE
SAMPLE SAMPLE SAMPLE
SAMPLE SAMPLE SAMPLE
SAMPLE SAMPLE SAMPLE
SAMPLE SAMPLE SAMPLE

PROJECT: SAMPLE SAMPLE SAMPLE

LOCATION: SAMPLE SAMPLE SAMPLE

SCALE: 3/8" = 1'-0"

DATE: SAMPLE

DRAWN: SAMPLE

PAGE: 6 of 47

= DENOTES F/T ANCHORS - SEE SHEET 35 FOR DETAILS

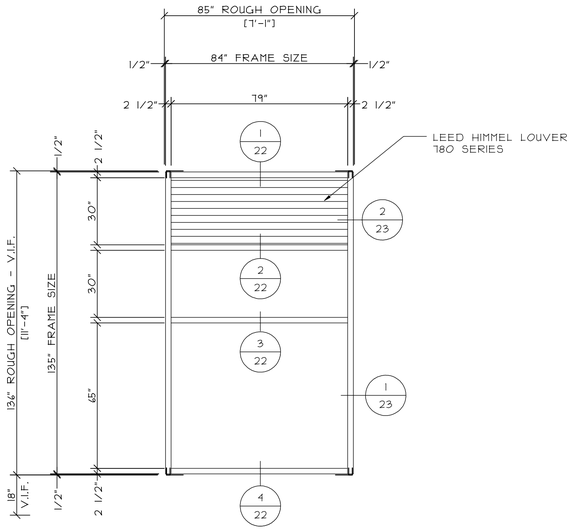

ELEVATION CW1
1 TOTAL
KAWNEER 1600 CURTAIN WALL
(2 1/2" X 7 1/2" FRAMING)

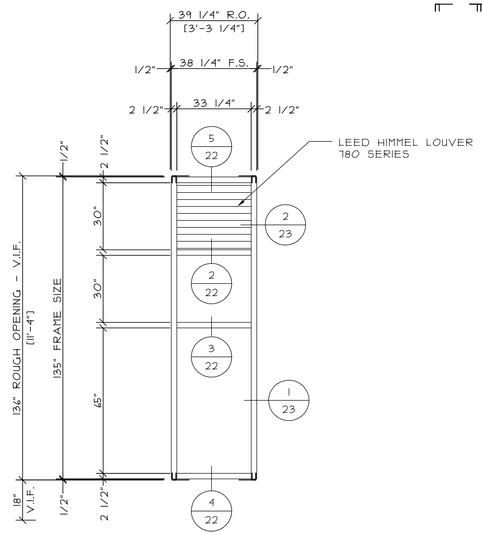

ELEVATION CW2
1 TOTAL
KAWNEER 1600 CURTAIN WALL
(2 1/2" X 7 1/2" FRAMING)

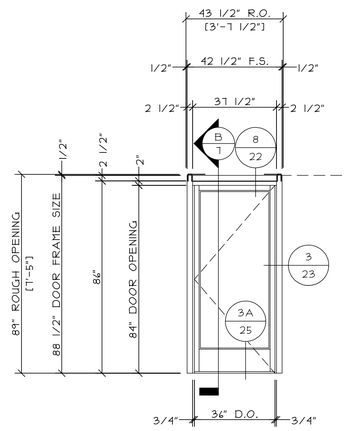

ELEVATION CW3
1 TOTAL & 1 OPPOSITE
KAWNEER 1600 CURTAIN WALL
(2 1/2" X 7 1/2" FRAMING)
NARROW STILE DOOR 'K'

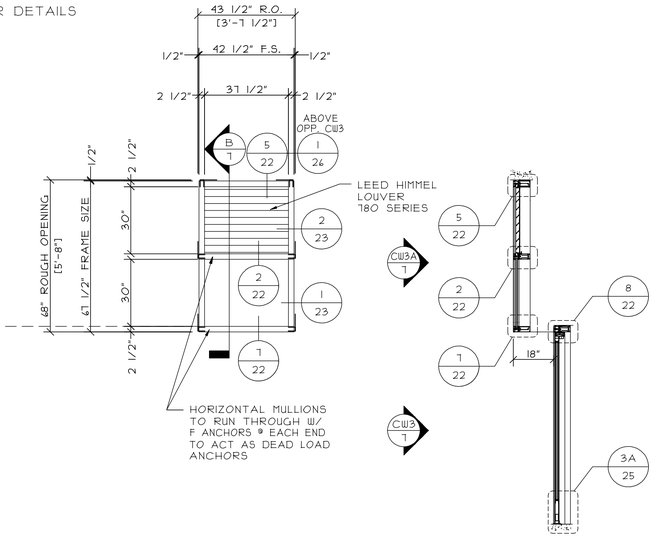

ELEVATION CW3A
1 TOTAL & 1 OPPOSITE
KAWNEER 1600 CURTAIN
WALL (2 1/2" X 7 1/2"
FRAMING)

SECTION B @
CW3A & CW3

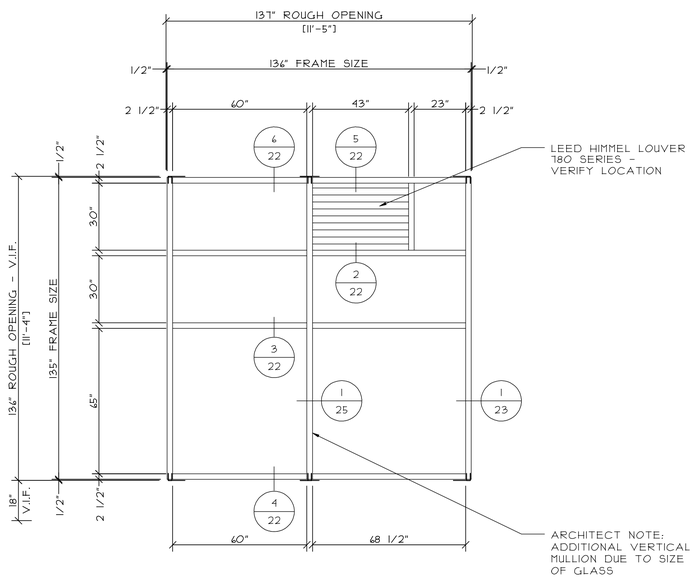

ELEVATION CW4
1 TOTAL
KAWNEER 1600 CURTAIN WALL
(2 1/2" X 7 1/2" FRAMING)

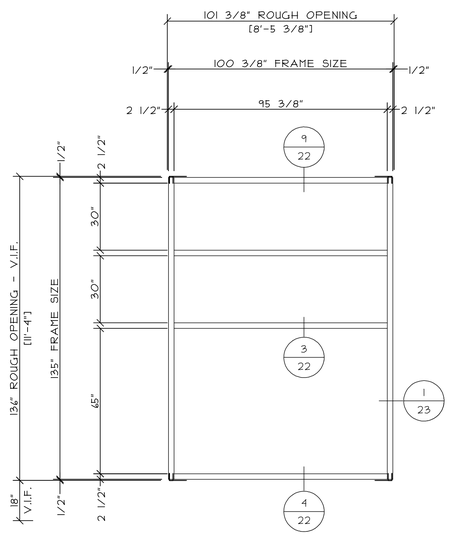

ELEVATION CW5
1 TOTAL
KAWNEER 1600 CURTAIN WALL
(2 1/2" X 7 1/2" FRAMING)

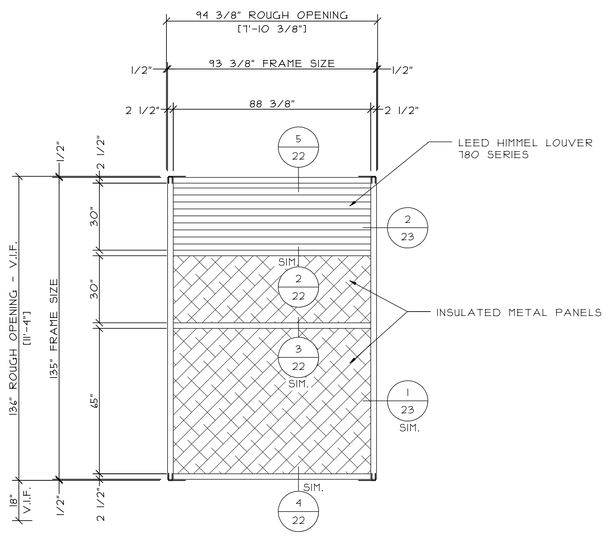

ELEVATION CW7
1 TOTAL
KAWNEER 1600 CURTAIN WALL
(2 1/2" X 7 1/2" FRAMING)

DATE:	REVISIONS:

GLAZING CONTRACTOR: SAMPLE SAMPLE SAMPLE
SAMPLE SAMPLE SAMPLE
SAMPLE SAMPLE SAMPLE
SAMPLE SAMPLE SAMPLE
SAMPLE SAMPLE SAMPLE
SAMPLE SAMPLE SAMPLE

ARCHITECT: SAMPLE SAMPLE SAMPLE
SAMPLE SAMPLE SAMPLE
SAMPLE SAMPLE SAMPLE
SAMPLE SAMPLE SAMPLE
SAMPLE SAMPLE SAMPLE
SAMPLE SAMPLE SAMPLE

PROJECT: SAMPLE SAMPLE SAMPLE

LOCATION: SAMPLE SAMPLE SAMPLE

SCALE: 3/8" = 1'-0"

DATE: SAMPLE

DRAWN: SAMPLE

PAGE: 7 of 47

= DENOTES F/T ANCHORS - SEE SHEET 35 FOR DETAILS

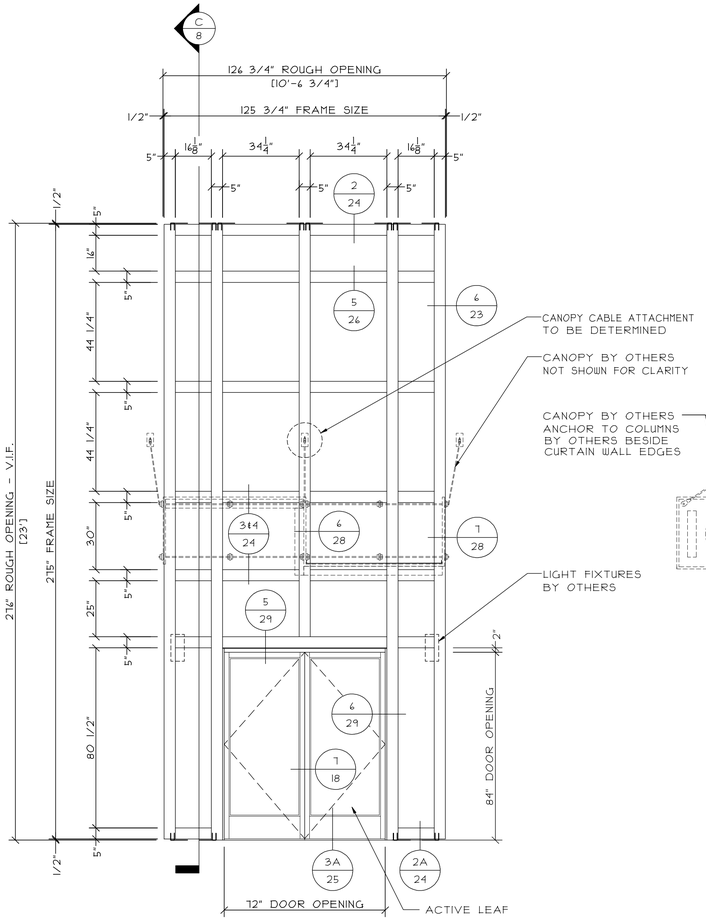

ELEVATION CW6
1 TOTAL
KAWNEER 1600 CURTAIN WALL
(5" X 7 1/2" FRAMING)
NARROW STILE DOOR 'B'

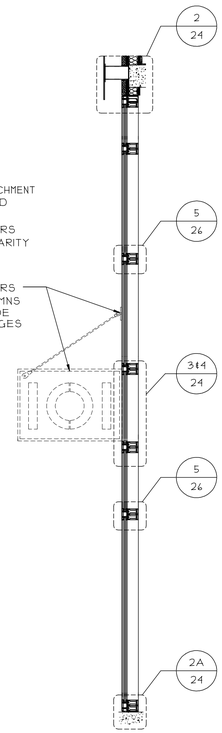

SECTION C @
CW6A & CW6

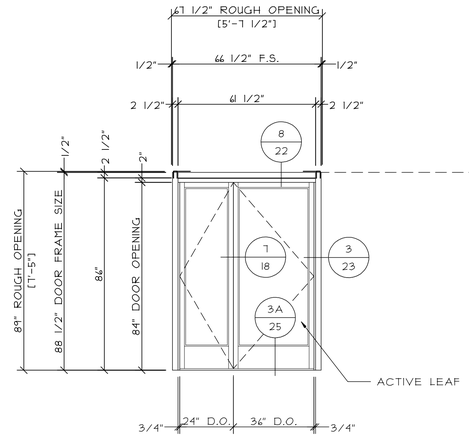

ELEVATION CW8
1 TOTAL
KAWNEER 1600 CURTAIN WALL
(2 1/2" X 7 1/2" FRAMING)
NARROW STILE DOOR 'E'

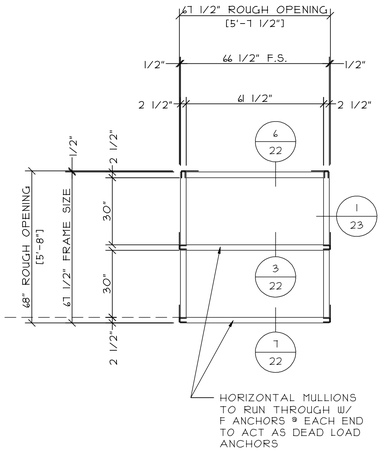

ELEVATION CW8A
1 TOTAL
KAWNEER 1600 CURTAIN WALL
(2 1/2" X 7 1/2" FRAMING)

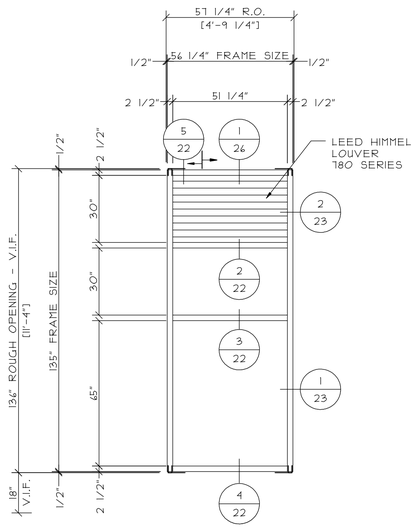

ELEVATION CW9
1 TOTAL
KAWNEER 1600 CURTAIN WALL
(2 1/2" X 7 1/2" FRAMING)

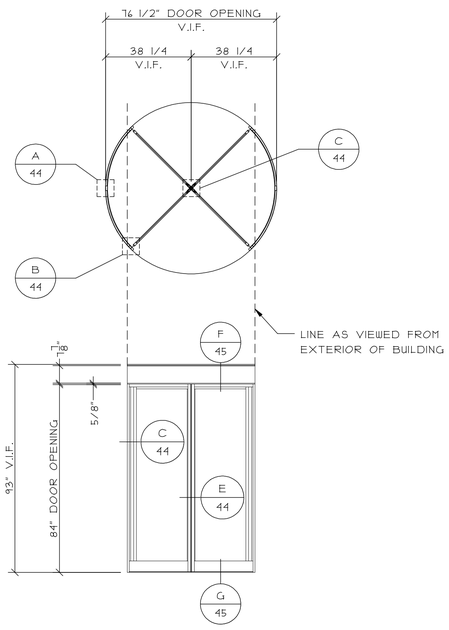

ELEVATION A
1 TOTAL
BESAM REVOLVING DOOR
SEE SEPARATE SUBMITTAL FOR ADDITIONAL INFORMATION ON THIS DOOR

DATE:	
REVISIONS:	
GLAZING CONTRACTOR:	SAMPLE SAMPLE SAMPLE SAMPLE SAMPLE SAMPLE SAMPLE SAMPLE SAMPLE SAMPLE SAMPLE SAMPLE SAMPLE SAMPLE SAMPLE
ARCHITECT:	SAMPLE SAMPLE SAMPLE SAMPLE SAMPLE SAMPLE SAMPLE SAMPLE SAMPLE SAMPLE SAMPLE SAMPLE SAMPLE SAMPLE SAMPLE
PROJECT:	SAMPLE SAMPLE SAMPLE
LOCATION:	SAMPLE SAMPLE SAMPLE
SCALE:	3/8" = 1'-0"
DATE:	SAMPLE
DRAWN:	SAMPLE
PAGE:	8 of 47

= DENOTES F/T ANCHORS - SEE SHEET 35 FOR DETAILS

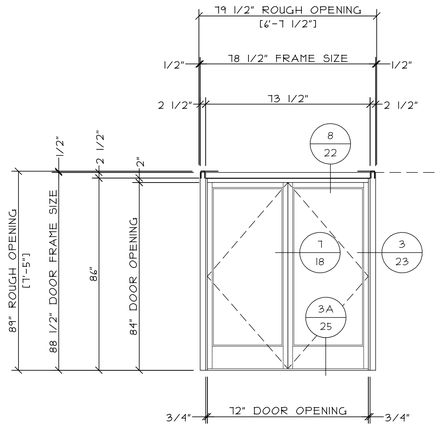

ELEVATION CW10
1 TOTAL
KAWNEER 1600 CURTAIN WALL
(2 1/2" X 7 1/2" FRAMING)
NARROW STILE DOOR 'A'

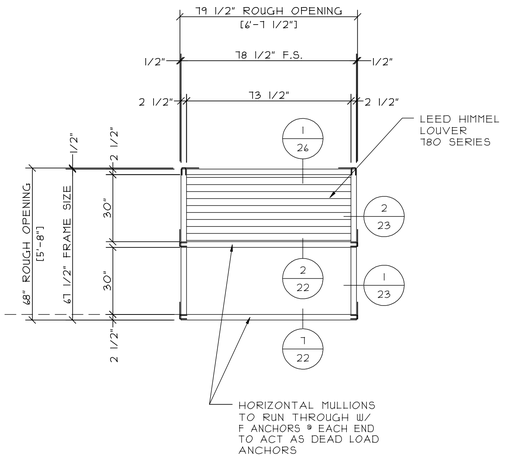

ELEVATION CW10A
1 TOTAL
KAWNEER 1600 CURTAIN WALL
(2 1/2" X 7 1/2" FRAMING)

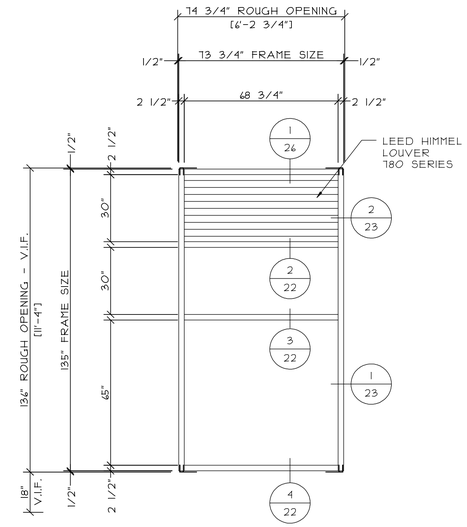

ELEVATION CW12
1 TOTAL
KAWNEER 1600 CURTAIN
WALL (2 1/2" X 7 1/2"
FRAMING)

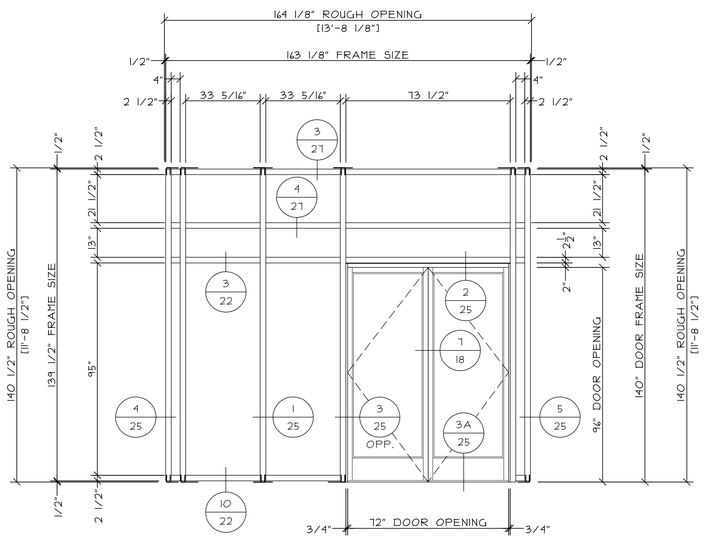

ELEVATION CW13
1 TOTAL
KAWNEER 1600 CURTAIN WALL
(2 1/2" X 7 1/2" FRAMING)
NARROW STILE DOOR 'A'

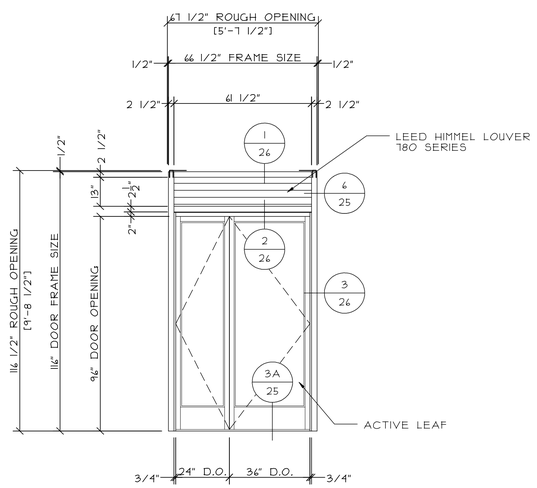

ELEVATION CW14
1 TOTAL
KAWNEER 1600 CURTAIN WALL
(2 1/2" X 7 1/2" FRAMING)
NARROW STILE DOOR 'D'

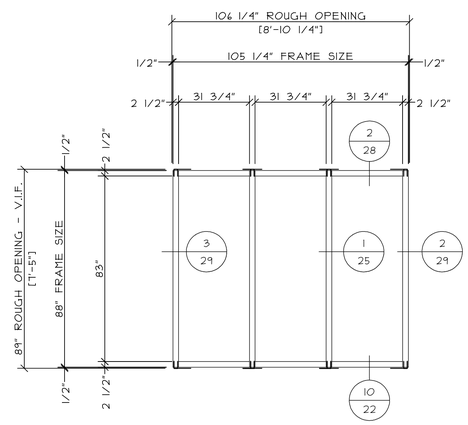

ELEVATION CW15
1 TOTAL
KAWNEER 1600 CURTAIN WALL
(2 1/2" X 7 1/2" FRAMING)

REVISIONS:	DATE:

GLAZING CONTRACTOR:
SAMPLE SAMPLE SAMPLE
SAMPLE SAMPLE SAMPLE
SAMPLE SAMPLE SAMPLE
SAMPLE SAMPLE SAMPLE
SAMPLE SAMPLE SAMPLE
SAMPLE SAMPLE SAMPLE

ARCHITECT:
SAMPLE SAMPLE SAMPLE
SAMPLE SAMPLE SAMPLE
SAMPLE SAMPLE SAMPLE
SAMPLE SAMPLE SAMPLE
SAMPLE SAMPLE SAMPLE
SAMPLE SAMPLE SAMPLE

PROJECT: SAMPLE SAMPLE SAMPLE

LOCATION: SAMPLE SAMPLE SAMPLE

SCALE: 3/8" = 1'-0"

DATE: SAMPLE

DRAWN: SAMPLE

PAGE: 9 of 47

= DENOTES F/T ANCHORS - SEE SHEET 35 FOR DETAILS

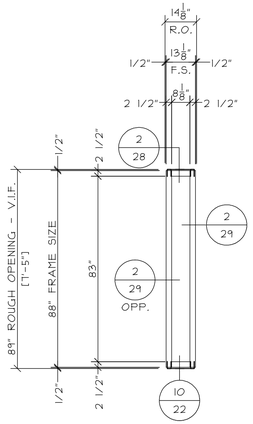

ELEVATION CW16

1 TOTAL

KAWNEER 1600 CURTAIN WALL
(2 1/2" X 7 1/2" FRAMING)

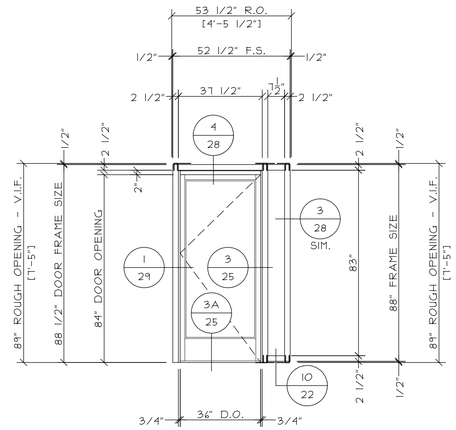

ELEVATION CW18

1 TOTAL

KAWNEER 1600 CURTAIN WALL
(2 1/2" X 7 1/2" FRAMING)

NARROW STILE DOOR 'J'

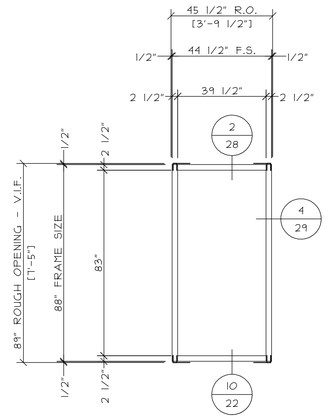

ELEVATION CW19

1 TOTAL

KAWNEER 1600 CURTAIN WALL
(2 1/2" X 7 1/2" FRAMING)

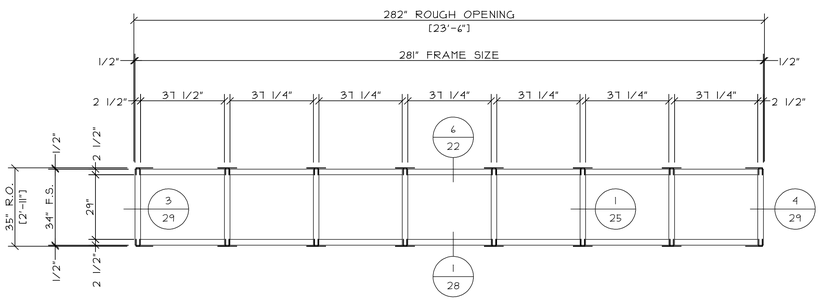

ELEVATION CW20

1 TOTAL

KAWNEER 1600 CURTAIN WALL
(2 1/2" X 7 1/2" FRAMING)

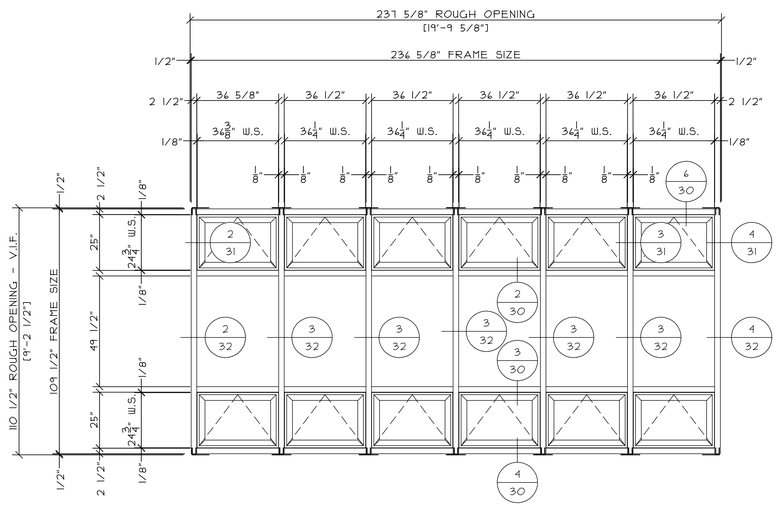

ELEVATION CW21

1 TOTAL

KAWNEER 1600 CURTAIN WALL
(2 1/2" X 7 1/2" FRAMING) WITH
8225TL PROJECT OUT WINDOWS

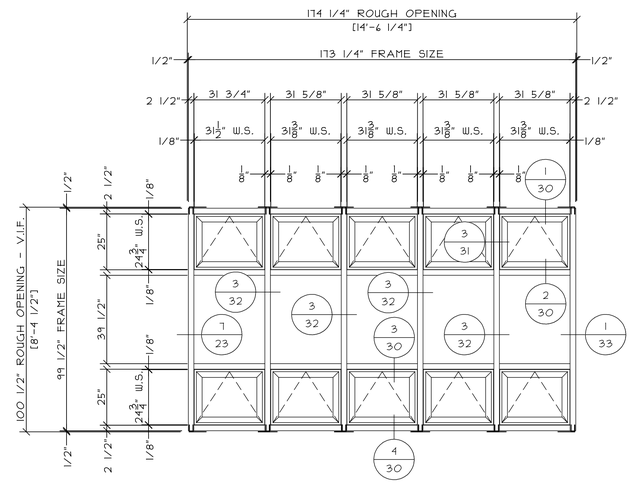

ELEVATION CW22

1 TOTAL

KAWNEER 1600 CURTAIN WALL
(2 1/2" X 7 1/2" FRAMING) WITH
8225TL PROJECT OUT WINDOWS

REVISIONS:	DATE:

GLAZING CONTRACTOR:
SAMPLE SAMPLE SAMPLE
SAMPLE SAMPLE SAMPLE
SAMPLE SAMPLE SAMPLE
SAMPLE SAMPLE SAMPLE
SAMPLE SAMPLE SAMPLE
SAMPLE SAMPLE SAMPLE

ARCHITECT:
SAMPLE SAMPLE SAMPLE
SAMPLE SAMPLE SAMPLE
SAMPLE SAMPLE SAMPLE
SAMPLE SAMPLE SAMPLE
SAMPLE SAMPLE SAMPLE
SAMPLE SAMPLE SAMPLE

PROJECT: SAMPLE SAMPLE SAMPLE

LOCATION: SAMPLE SAMPLE SAMPLE

SCALE: 3/8" = 1'-0"

DATE: SAMPLE

DRAWN: SAMPLE

PAGE: 10 of 47

= DENOTES F/T ANCHORS - SEE SHEET 35 FOR DETAILS

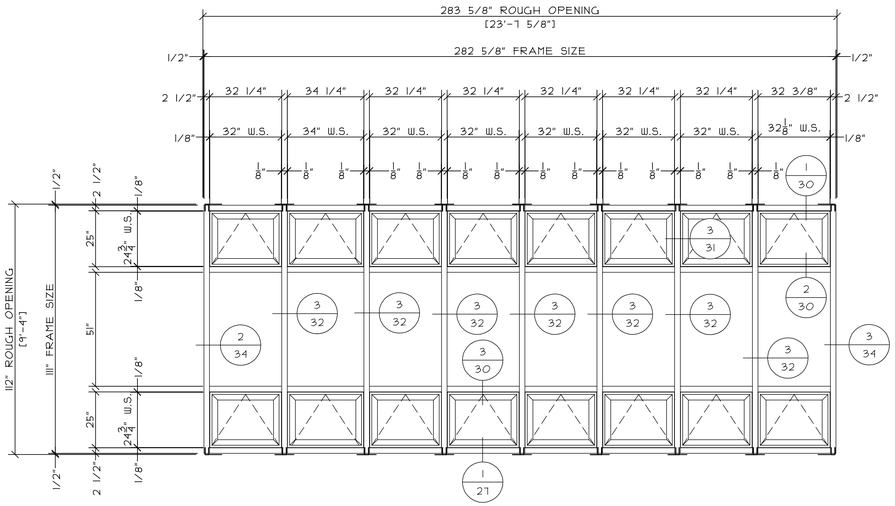

ELEVATION CW23

1 TOTAL

KAWNEER 1600 CURTAIN WALL
(2 1/2" X 7 1/2" FRAMING) WITH
8225TL PROJECT OUT WINDOWS

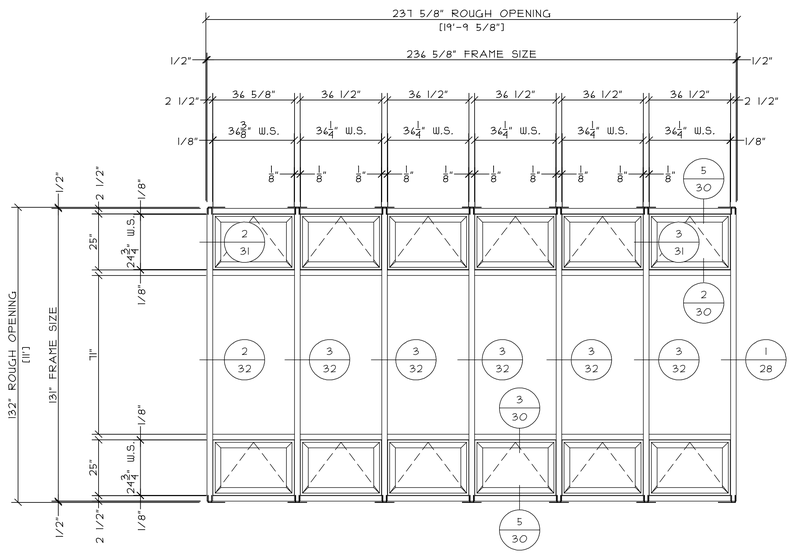

ELEVATION CW25

1 TOTAL

KAWNEER 1600 CURTAIN WALL
(2 1/2" X 7 1/2" FRAMING) WITH
8225TL PROJECT OUT WINDOWS

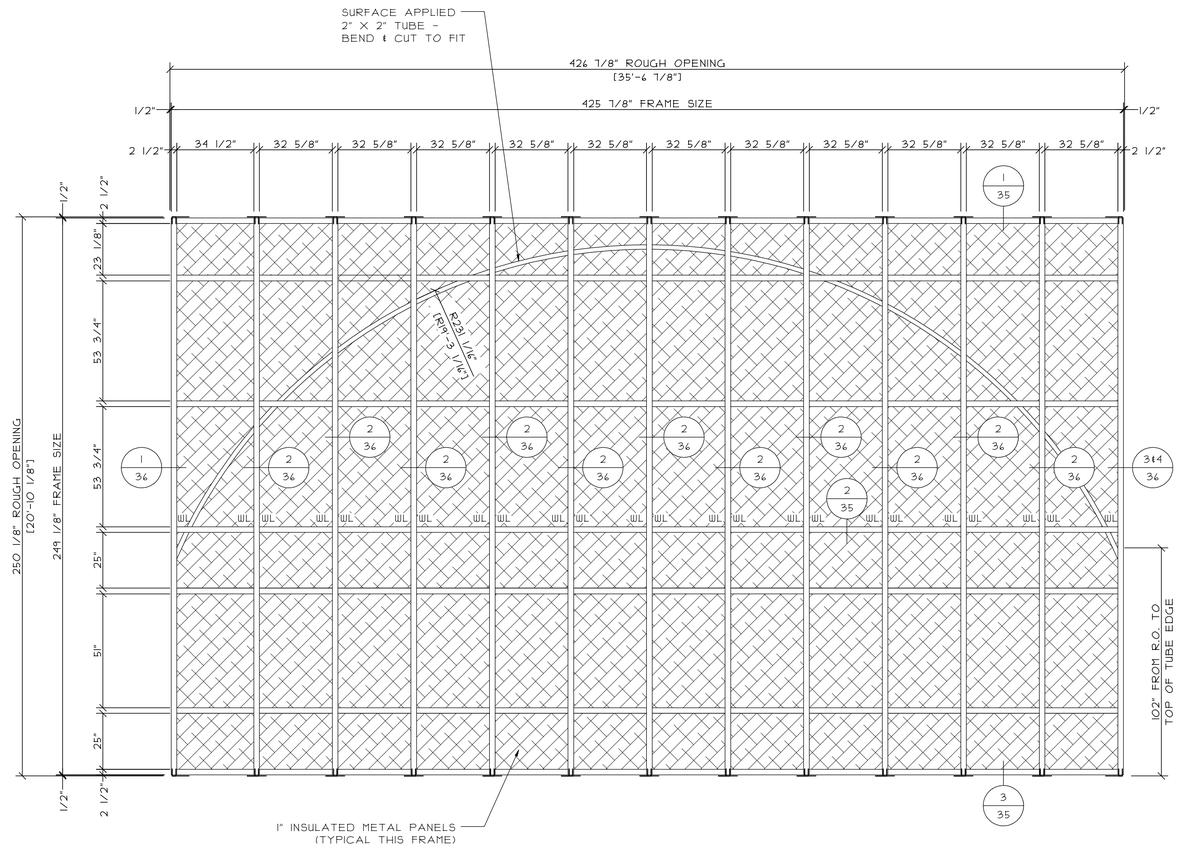

WL = DENOTES WIND LOAD CLIPS TO BE DETERMINED - SEE DETAIL 6 ON SHEET 36A

ELEVATION CW24

1 TOTAL

KAWNEER 1600 CURTAIN WALL
(2 1/2" X 7 1/2" FRAMING)

DATE:	
REVISIONS:	

GLAZING CONTRACTOR:
SAMPLE SAMPLE SAMPLE
SAMPLE SAMPLE SAMPLE
SAMPLE SAMPLE SAMPLE
SAMPLE SAMPLE SAMPLE
SAMPLE SAMPLE SAMPLE
SAMPLE SAMPLE SAMPLE

ARCHITECT:
SAMPLE SAMPLE SAMPLE
SAMPLE SAMPLE SAMPLE
SAMPLE SAMPLE SAMPLE
SAMPLE SAMPLE SAMPLE
SAMPLE SAMPLE SAMPLE
SAMPLE SAMPLE SAMPLE

PROJECT: SAMPLE SAMPLE SAMPLE

LOCATION: SAMPLE SAMPLE SAMPLE

SCALE: 3/8" = 1'-0"

DATE: SAMPLE

DRAWN: SAMPLE

PAGE: 11 of 47

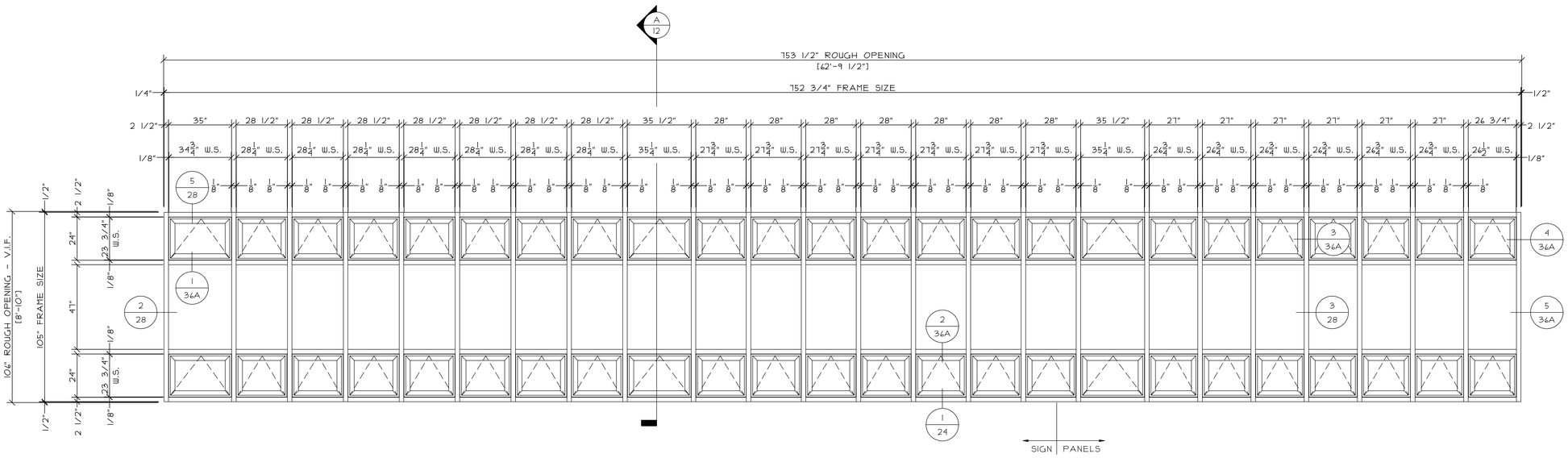

ELEVATION CW26

1 TOTAL

KAWNEER 1600 CURTAIN WALL
(2 1/2" X 6" FRAMING) WITH
8225TL PROJECT OUT WINDOWS

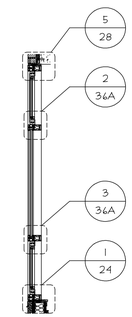

SECTION A @ CW26

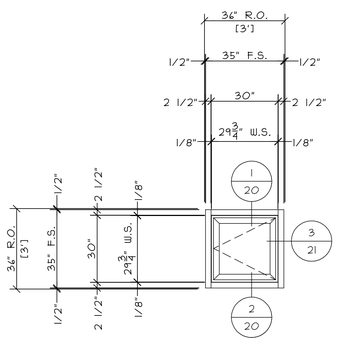

ELEVATION CW27

5 TOTAL

KAWNEER 1600 CURTAIN WALL
(2 1/2" X 6" FRAMING) WITH
8225TL PROJECT OUT WINDOW

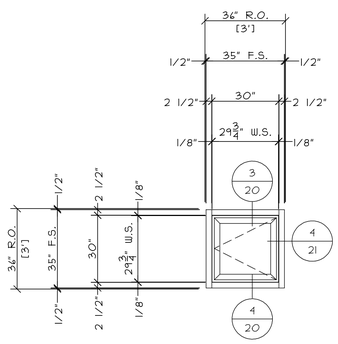

ELEVATION CW27A

4 TOTAL

KAWNEER 1600 CURTAIN WALL
(2 1/2" X 6" FRAMING) WITH
8225TL PROJECT OUT WINDOW

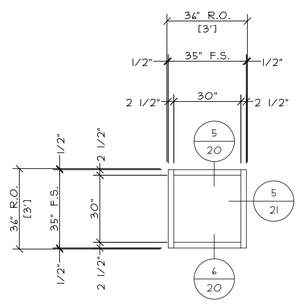

ELEVATION CW28

5 TOTAL

KAWNEER 1600 CURTAIN WALL
(2 1/2" X 6" FRAMING)

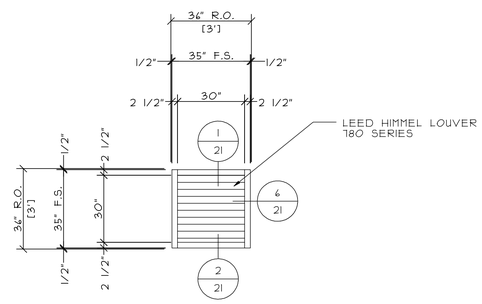

ELEVATION CW29

1 TOTAL

KAWNEER 1600 CURTAIN WALL
(2 1/2" X 6" FRAMING)

REVISIONS:	DATE:

GLAZING CONTRACTOR:
SAMPLE SAMPLE SAMPLE
SAMPLE SAMPLE SAMPLE
SAMPLE SAMPLE SAMPLE
SAMPLE SAMPLE SAMPLE
SAMPLE SAMPLE SAMPLE

ARCHITECT:
SAMPLE SAMPLE SAMPLE
SAMPLE SAMPLE SAMPLE
SAMPLE SAMPLE SAMPLE
SAMPLE SAMPLE SAMPLE
SAMPLE SAMPLE SAMPLE

PROJECT: SAMPLE SAMPLE SAMPLE

LOCATION: SAMPLE SAMPLE SAMPLE

SCALE: 3/8" = 1'-0"

DATE: SAMPLE

DRAWN: SAMPLE

= DENOTES LOCATION OF 1/8" THICK CORTEN PANELS

= DENOTES LOCATION OF 2" THICK OMEGA LITE PANELS

PANEL JOINTS 1/2" - TYPICAL

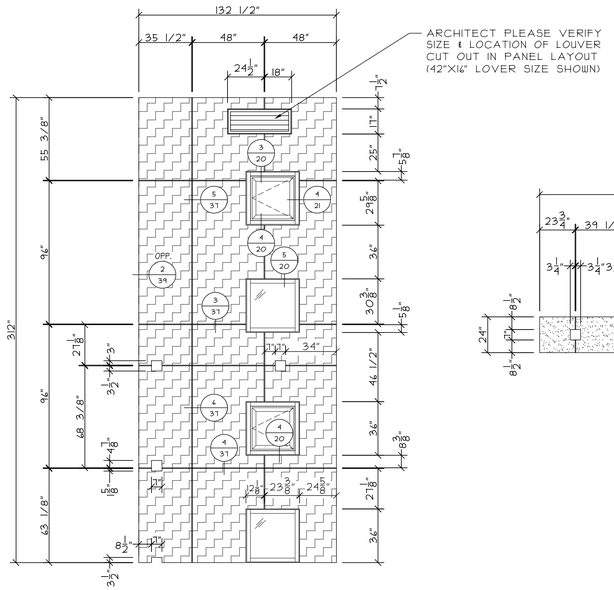

PANEL LAYOUT 'A'

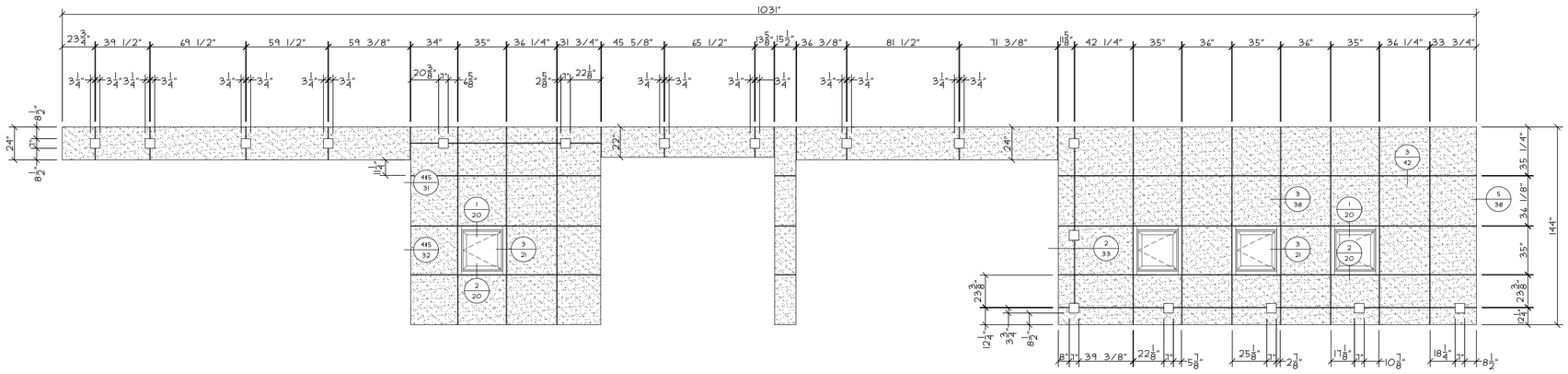

PANEL LAYOUT 'B'

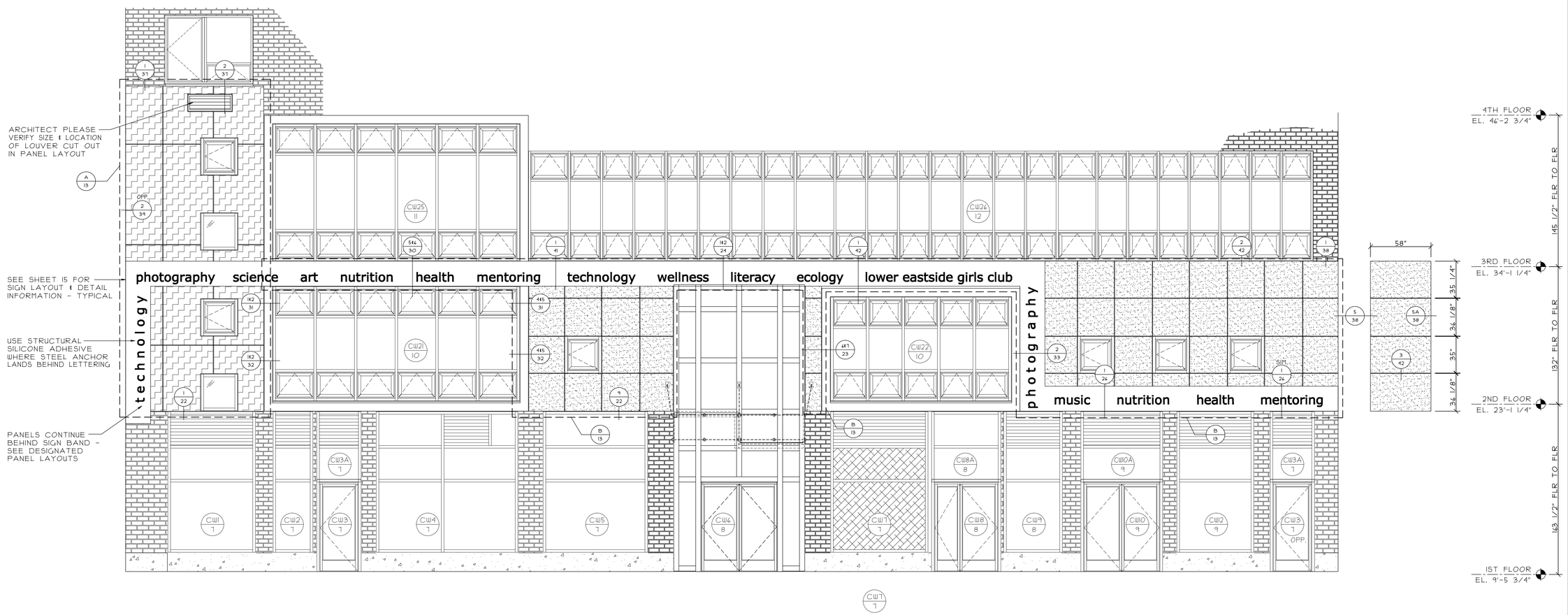

EAST ELEVATION

REF. 1/A200

DATE:	REVISIONS:

GLAZING CONTRACTOR:
SAMPLE SAMPLE SAMPLE
SAMPLE SAMPLE SAMPLE
SAMPLE SAMPLE SAMPLE
SAMPLE SAMPLE SAMPLE
SAMPLE SAMPLE SAMPLE
SAMPLE SAMPLE SAMPLE

ARCHITECT:
SAMPLE SAMPLE SAMPLE
SAMPLE SAMPLE SAMPLE
SAMPLE SAMPLE SAMPLE
SAMPLE SAMPLE SAMPLE
SAMPLE SAMPLE SAMPLE
SAMPLE SAMPLE SAMPLE

PROJECT: SAMPLE SAMPLE SAMPLE

LOCATION: SAMPLE SAMPLE SAMPLE

SCALE: 1/4" = 1'-0"

DATE: SAMPLE

DRAWN: SAMPLE

PAGE: 13 of 47

= DENOTES LOCATION OF 1/8" THICK CORTEN PANELS

= DENOTES LOCATION OF 2" THICK OMEGA LITE PANELS

PANEL JOINTS 1/2" - TYPICAL

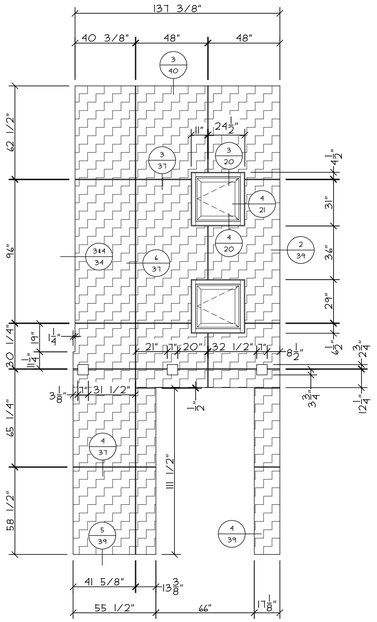

PANEL LAYOUT 'G'

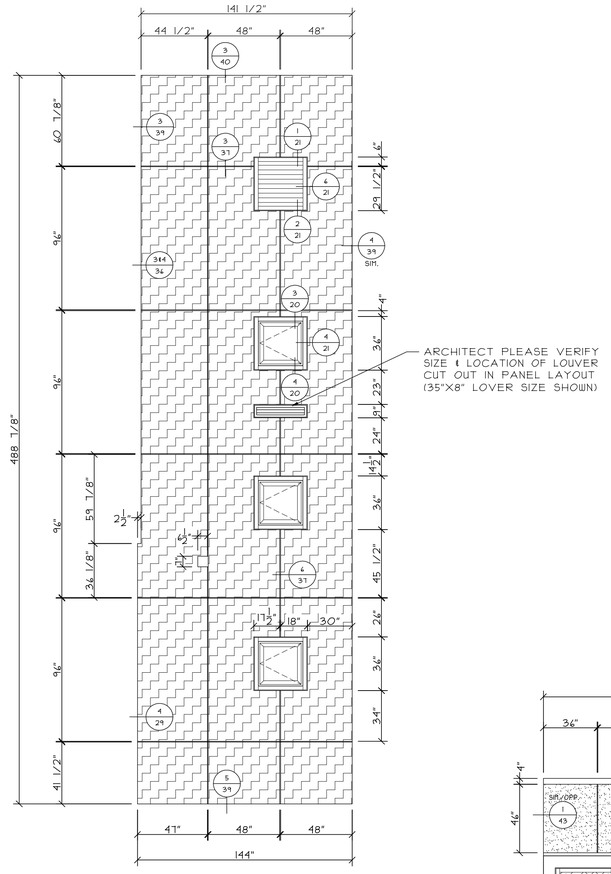

PANEL LAYOUT 'N'

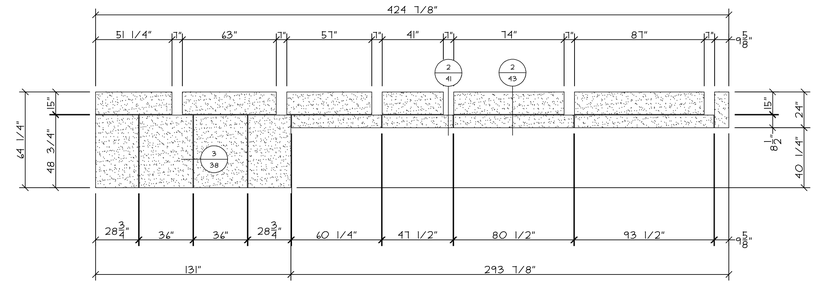

PANEL LAYOUT 'M'

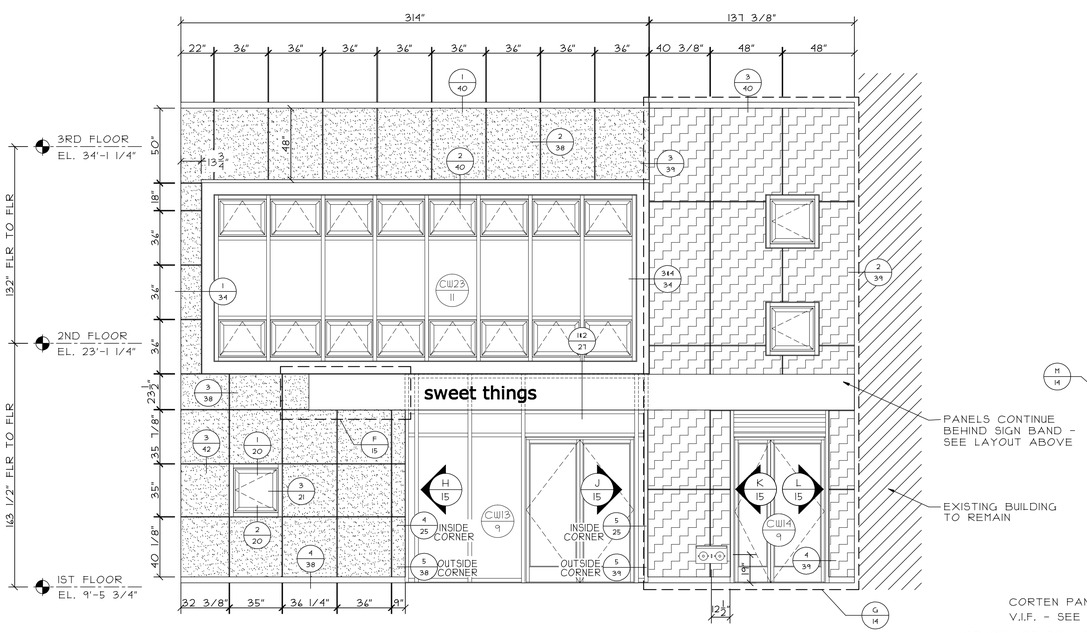

SOUTH ELEVATION

REF. 1/A201

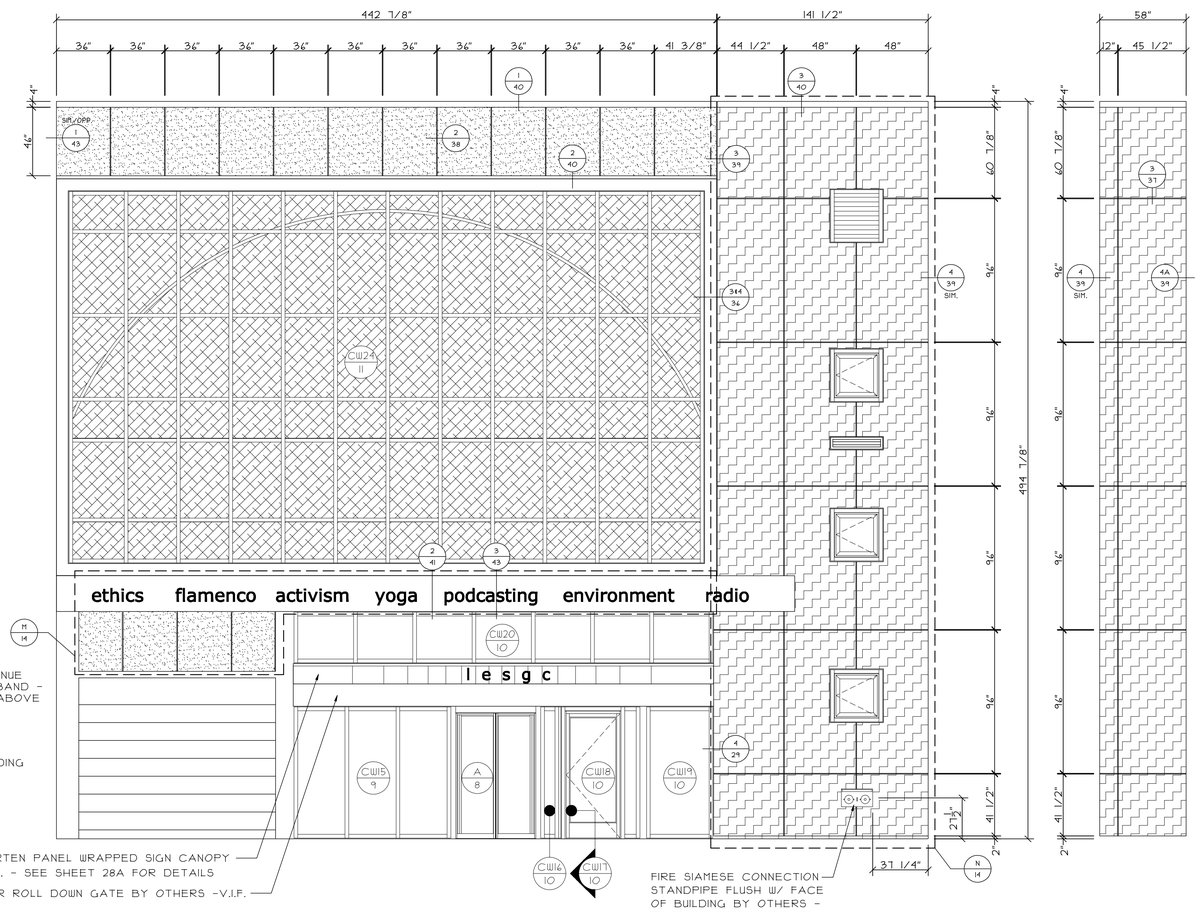

NORTH ELEVATION

REF. 2/A201

REVISIONS:	DATE:

GLAZING CONTRACTOR: SAMPLE SAMPLE SAMPLE
SAMPLE SAMPLE SAMPLE
SAMPLE SAMPLE SAMPLE
SAMPLE SAMPLE SAMPLE
SAMPLE SAMPLE SAMPLE

ARCHITECT: SAMPLE SAMPLE SAMPLE
SAMPLE SAMPLE SAMPLE
SAMPLE SAMPLE SAMPLE
SAMPLE SAMPLE SAMPLE
SAMPLE SAMPLE SAMPLE

PROJECT: SAMPLE SAMPLE SAMPLE

LOCATION: SAMPLE SAMPLE SAMPLE

SCALE: 1/4" = 1'-0"

DATE: SAMPLE

DRAWN: SAMPLE

PAGE: 14 of 47

= DENOTES LOCATION OF 1/8" THICK CORTEN PANELS

= DENOTES LOCATION OF 2" THICK OMEGA LITE PANELS

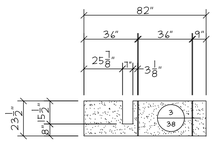

PANEL LAYOUT 'F'

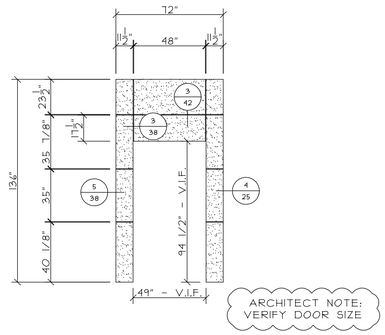

PANEL LAYOUT 'H'

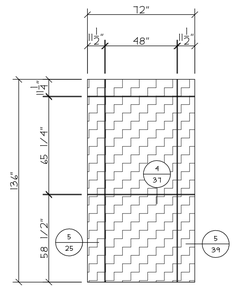

PANEL LAYOUT 'J'

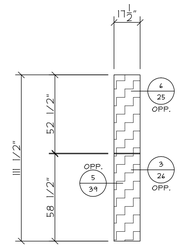

PANEL LAYOUT 'K'

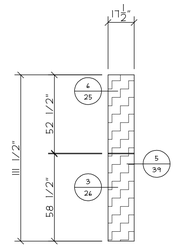

PANEL LAYOUT 'L'

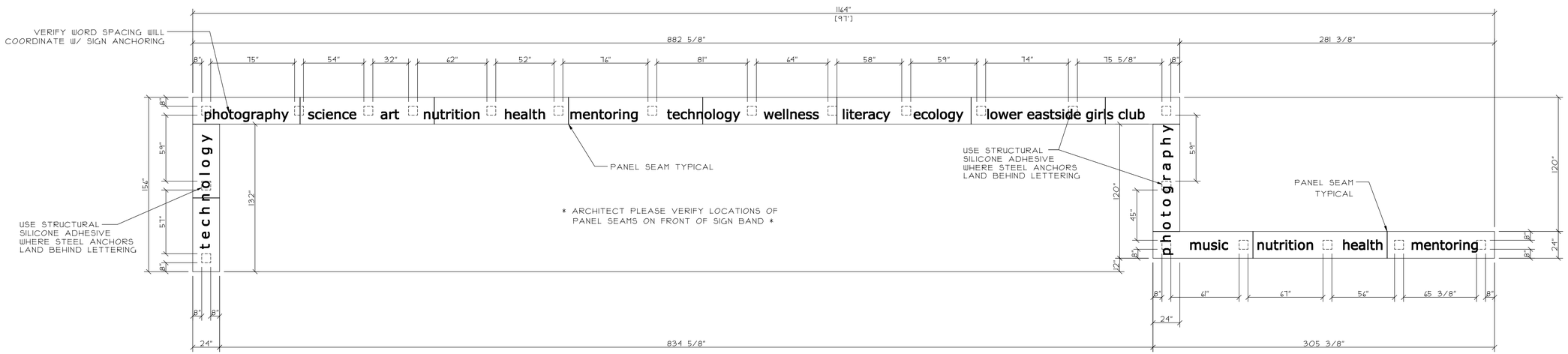

EAST ELEVATION SIGN BAND

REF. 1/A200

SIGN BAND NOTES

CORTEN PANELS WRAPPED FIRST AROUND BACK SIDE OF STEEL SIGN BAND. SEAMS FOR BACK SIDE PANELS SHALL ALIGN WITH STEEL OUTRIGGERS.

CORTEN PANELS WRAPPED AT FRONT SIDE OF SIGN BAND. SEAMS FOR FRONT SIDE PANELS SHALL MEET BETWEEN LETTERING CUTOUT LOCATIONS.

22 GAUGE STAINLESS STEEL BETWEEN STEEL SIGN BAND AND FRONT WRAPPED PANELS WHERE CUTOUTS IN PANELS ARE LOCATED FOR LETTERING.

ANCHOR PANELS AT TOP & BOTTOM EDGES OF STEEL THROUGH BOTH PANELS.

SEE BUILDING ELEVATIONS FOR SECTIONS THRU SIGN BAND ON SHEETS 13 AND 14

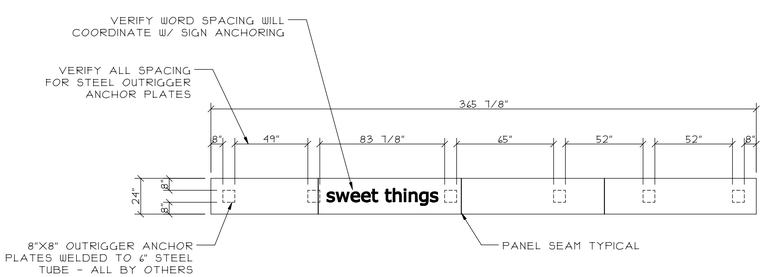

SOUTH ELEVATION SIGN BAND

REF. 1/A201

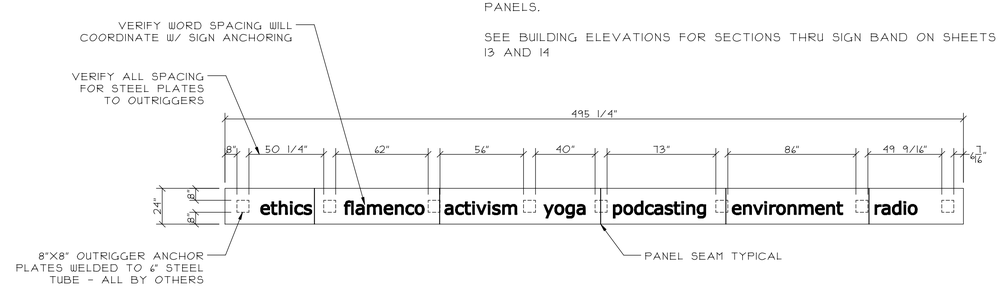

NORTH ELEVATION SIGN BAND

REF. 2/A201

DATE:	REVISIONS:

GLAZING CONTRACTOR:
SAMPLE SAMPLE SAMPLE
SAMPLE SAMPLE SAMPLE
SAMPLE SAMPLE SAMPLE
SAMPLE SAMPLE SAMPLE
SAMPLE SAMPLE SAMPLE
SAMPLE SAMPLE SAMPLE

ARCHITECT:
SAMPLE SAMPLE SAMPLE
SAMPLE SAMPLE SAMPLE
SAMPLE SAMPLE SAMPLE
SAMPLE SAMPLE SAMPLE
SAMPLE SAMPLE SAMPLE
SAMPLE SAMPLE SAMPLE

PROJECT: SAMPLE SAMPLE SAMPLE

LOCATION: SAMPLE SAMPLE SAMPLE

SCALE: 1/4" = 1'-0"

DATE: SAMPLE

DRAWN: SAMPLE

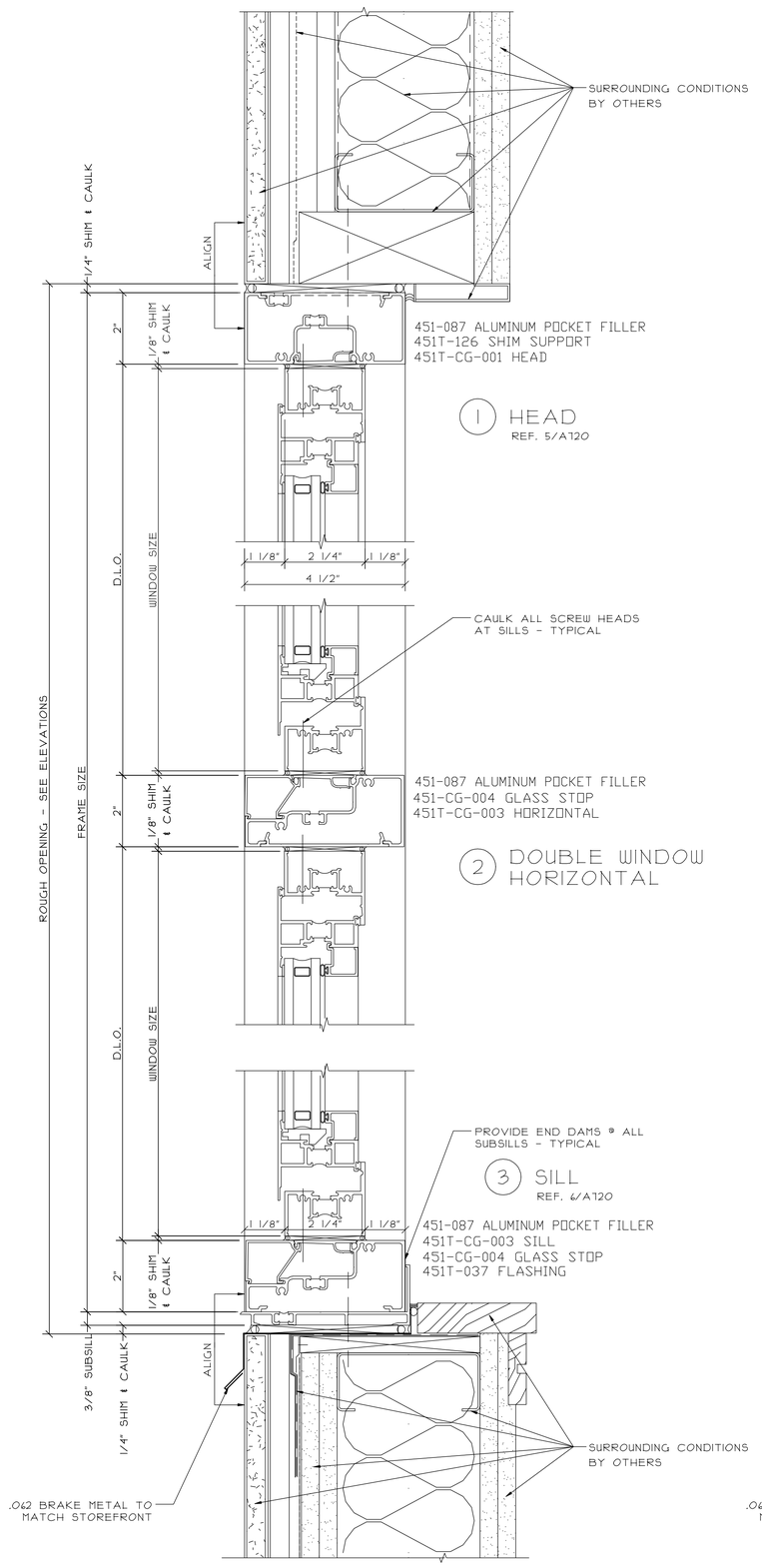

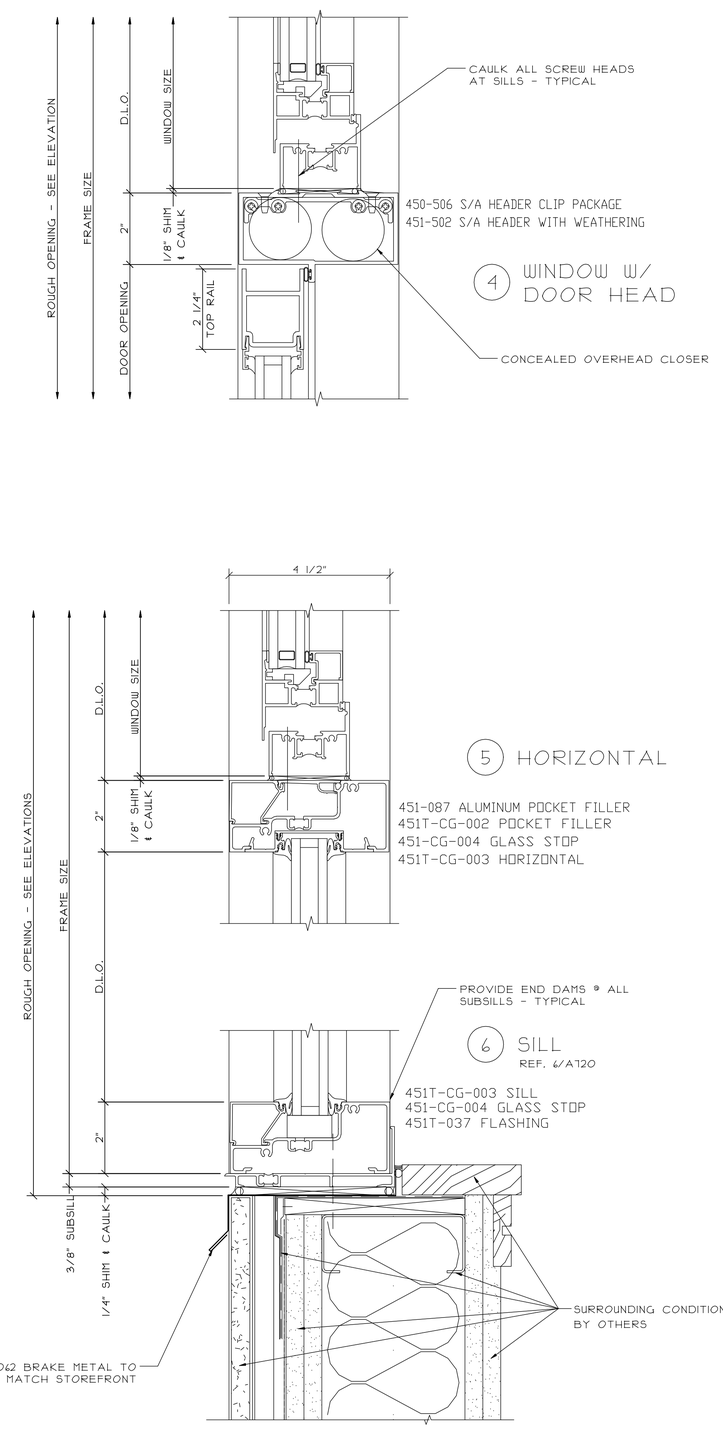

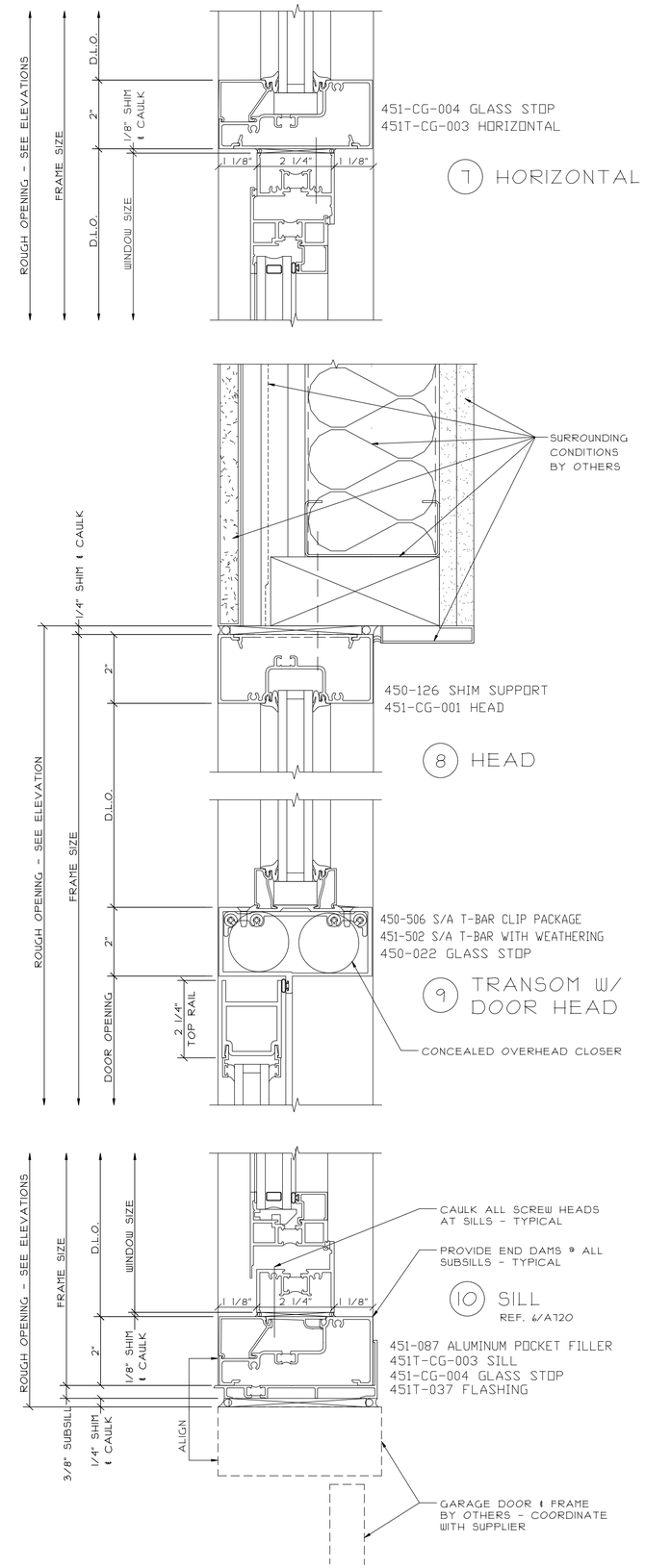

REVISIONS:	DATE:

GLAZING CONTRACTOR:
SAMPLE SAMPLE SAMPLE
SAMPLE SAMPLE SAMPLE
SAMPLE SAMPLE SAMPLE
SAMPLE SAMPLE SAMPLE
SAMPLE SAMPLE SAMPLE

ARCHITECT:
SAMPLE SAMPLE SAMPLE
SAMPLE SAMPLE SAMPLE
SAMPLE SAMPLE SAMPLE
SAMPLE SAMPLE SAMPLE
SAMPLE SAMPLE SAMPLE

PROJECT: SAMPLE SAMPLE SAMPLE

LOCATION: SAMPLE SAMPLE SAMPLE

SCALE: 6" = 1'-0"

DATE: SAMPLE

DRAWN: SAMPLE

PAGE: 16 of 47

1 EXPANSION MULLION

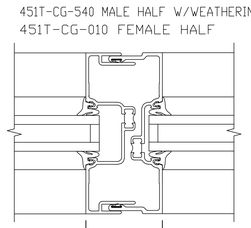

2 VERTICAL

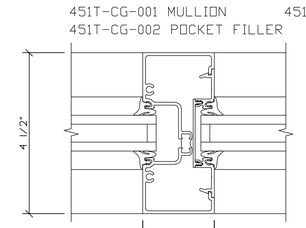

3 JAMB

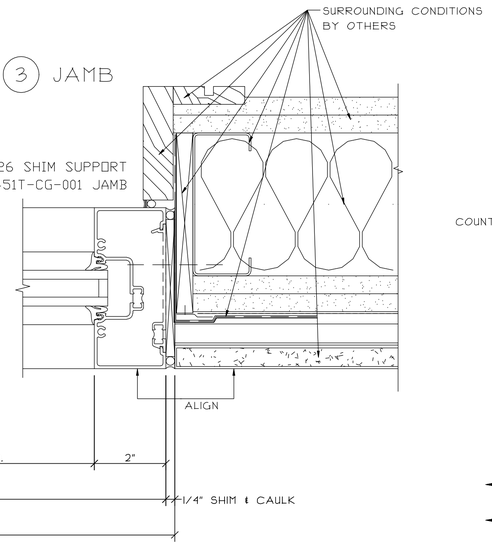

4 DOOR JAMB

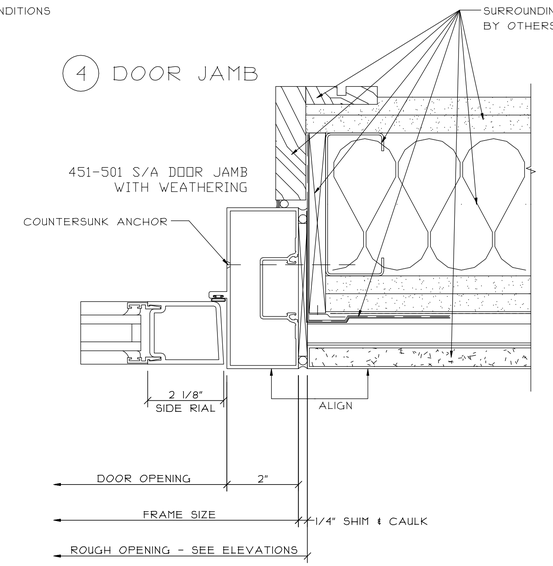

5 JAMB ABOVE DOOR

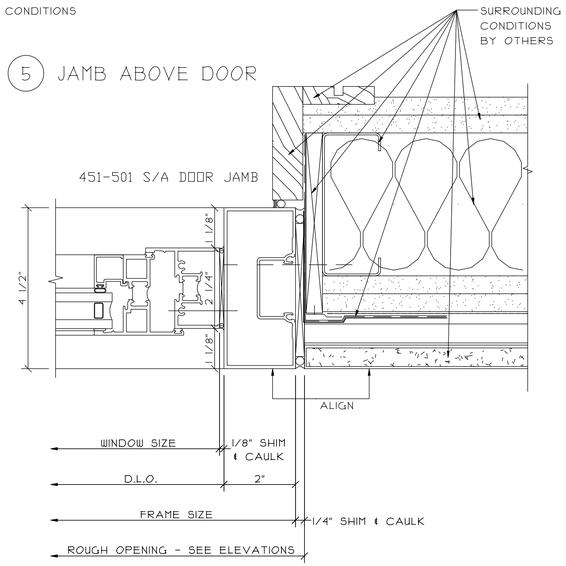

6 DOUBLE WINDOW EXPANSION MULLION

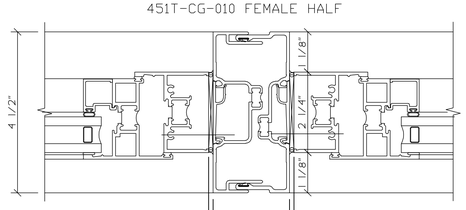

7 DOUBLE WINDOW VERTICAL

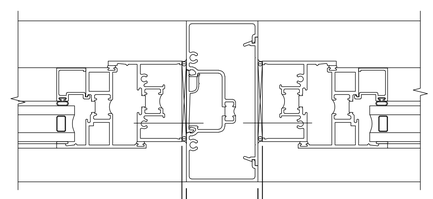

8 WINDOW JAMB

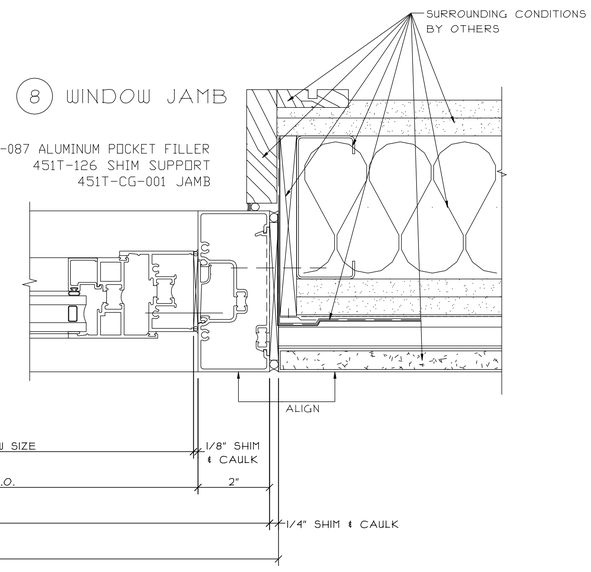

9 JAMB ABOVE DOOR

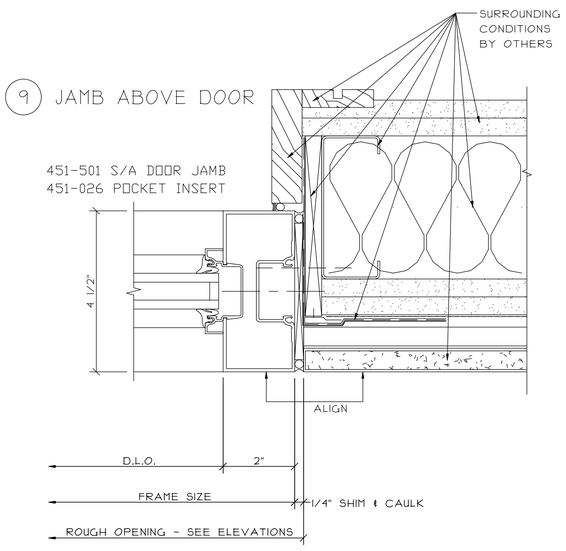

DATE:	REVISIONS:

GLAZING CONTRACTOR: SAMPLE SAMPLE SAMPLE
SAMPLE SAMPLE SAMPLE
SAMPLE SAMPLE SAMPLE
SAMPLE SAMPLE SAMPLE
SAMPLE SAMPLE SAMPLE

ARCHITECT: SAMPLE SAMPLE SAMPLE
SAMPLE SAMPLE SAMPLE
SAMPLE SAMPLE SAMPLE
SAMPLE SAMPLE SAMPLE
SAMPLE SAMPLE SAMPLE

PROJECT: SAMPLE SAMPLE SAMPLE

LOCATION: SAMPLE SAMPLE SAMPLE

SCALE: 6" = 1'-0"

DATE: SAMPLE

DRAWN: SAMPLE

PAGE: 17 of 47

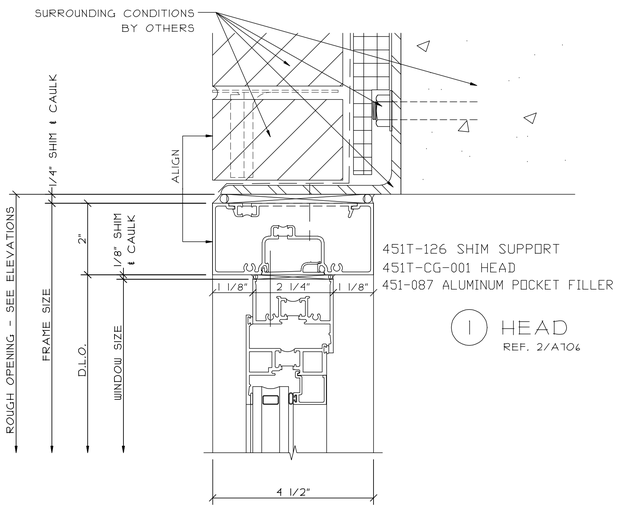

1 HEAD
REF. 2/A706

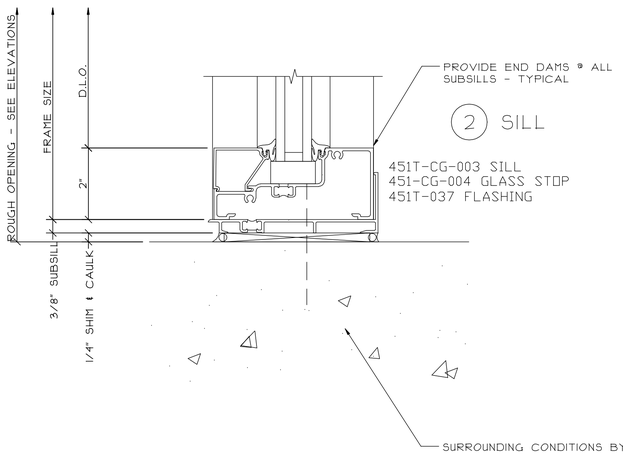

2 SILL

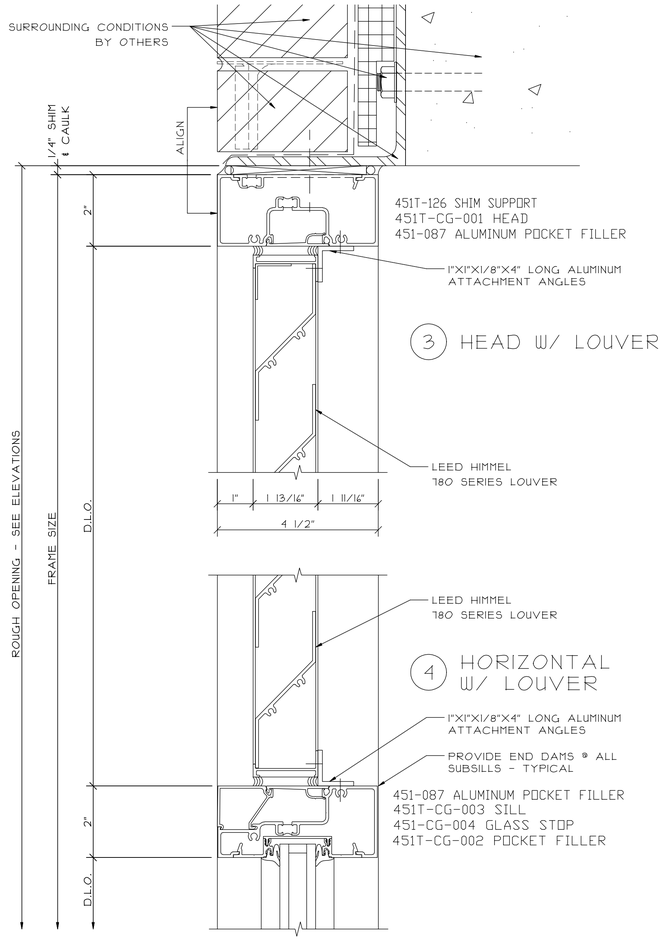

3 HEAD W/ LOUVER

4 HORIZONTAL W/ LOUVER

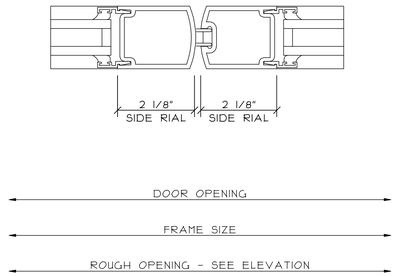

7 MEETING RAIL

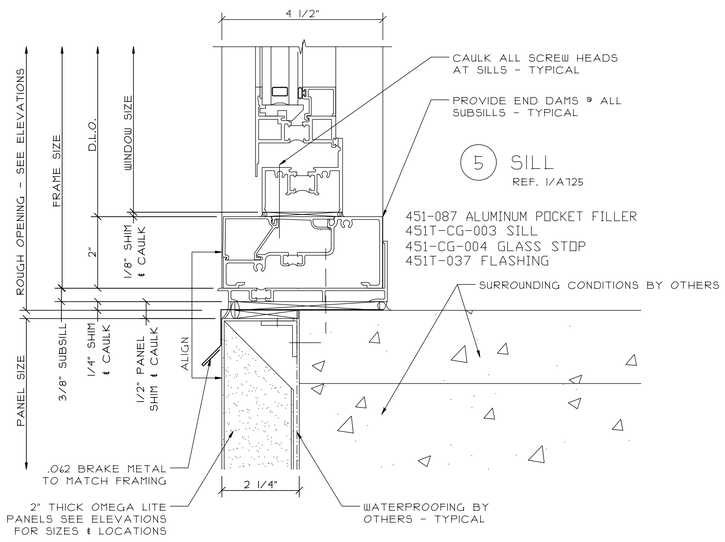

5 SILL
REF. 1/A725

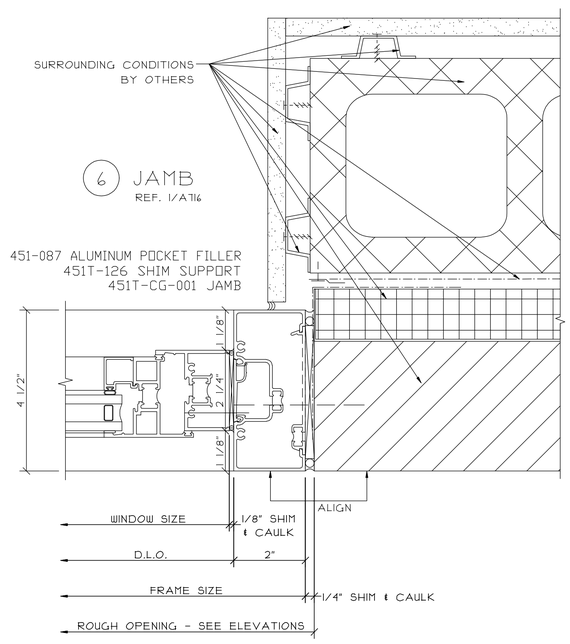

6 JAMB
REF. 1/A716

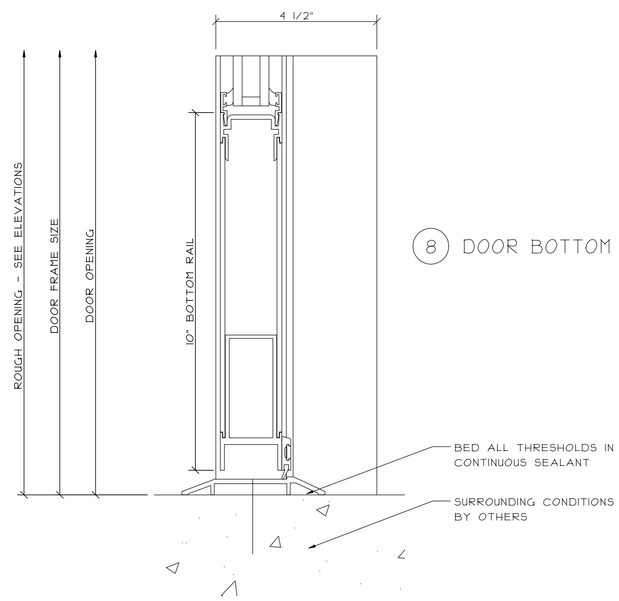

8 DOOR BOTTOM

REVISIONS:	DATE:

GLAZING CONTRACTOR: SAMPLE SAMPLE SAMPLE
SAMPLE SAMPLE SAMPLE
SAMPLE SAMPLE SAMPLE
SAMPLE SAMPLE SAMPLE
SAMPLE SAMPLE SAMPLE
SAMPLE SAMPLE SAMPLE

ARCHITECT: SAMPLE SAMPLE SAMPLE
SAMPLE SAMPLE SAMPLE
SAMPLE SAMPLE SAMPLE
SAMPLE SAMPLE SAMPLE
SAMPLE SAMPLE SAMPLE
SAMPLE SAMPLE SAMPLE

PROJECT: SAMPLE SAMPLE SAMPLE

LOCATION: SAMPLE SAMPLE SAMPLE

SCALE: 6" = 1'-0"

DATE: SAMPLE

DRAWN: SAMPLE

PAGE: 18 of 47

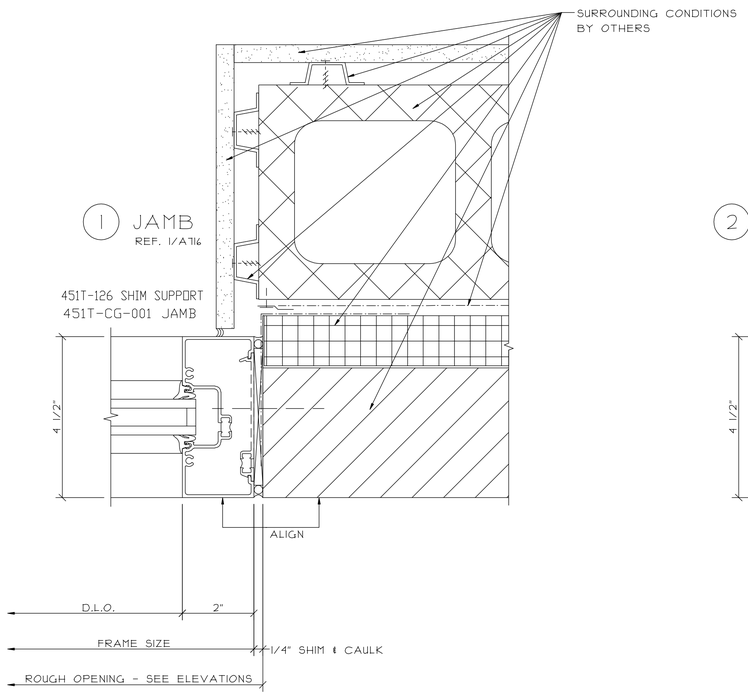

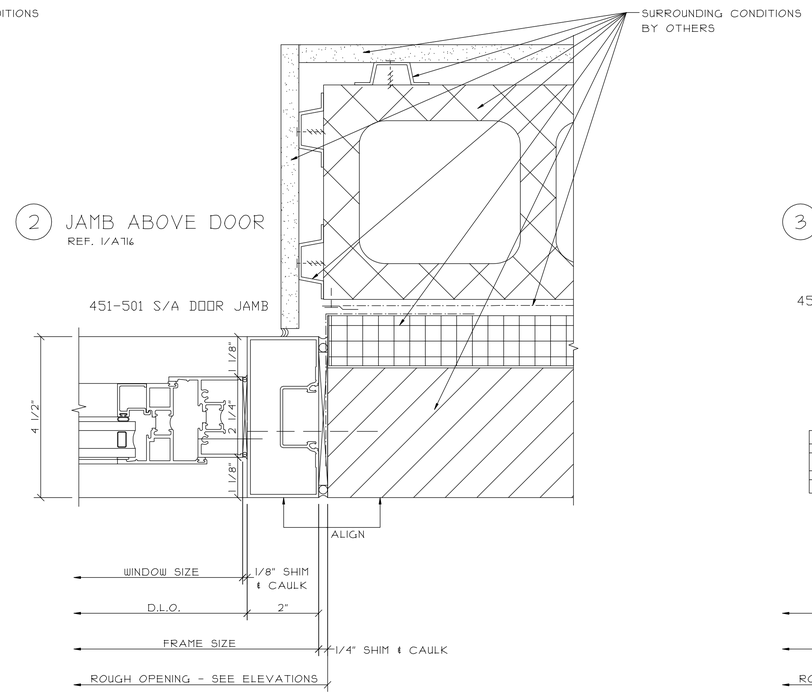

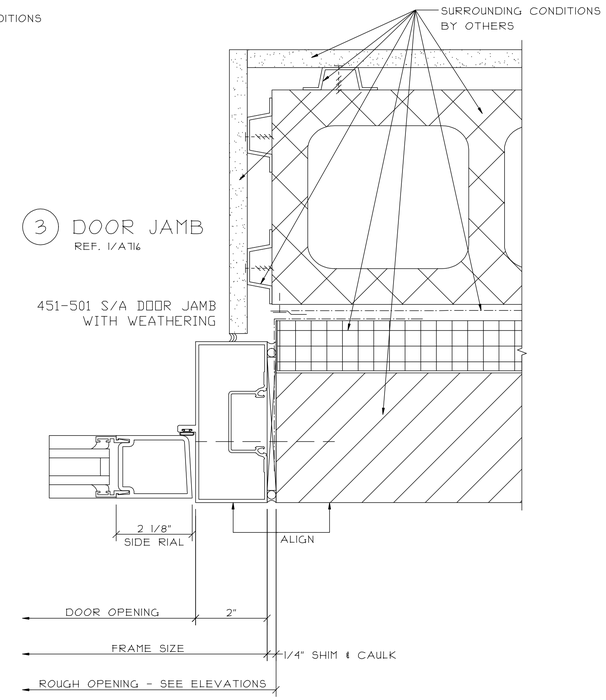

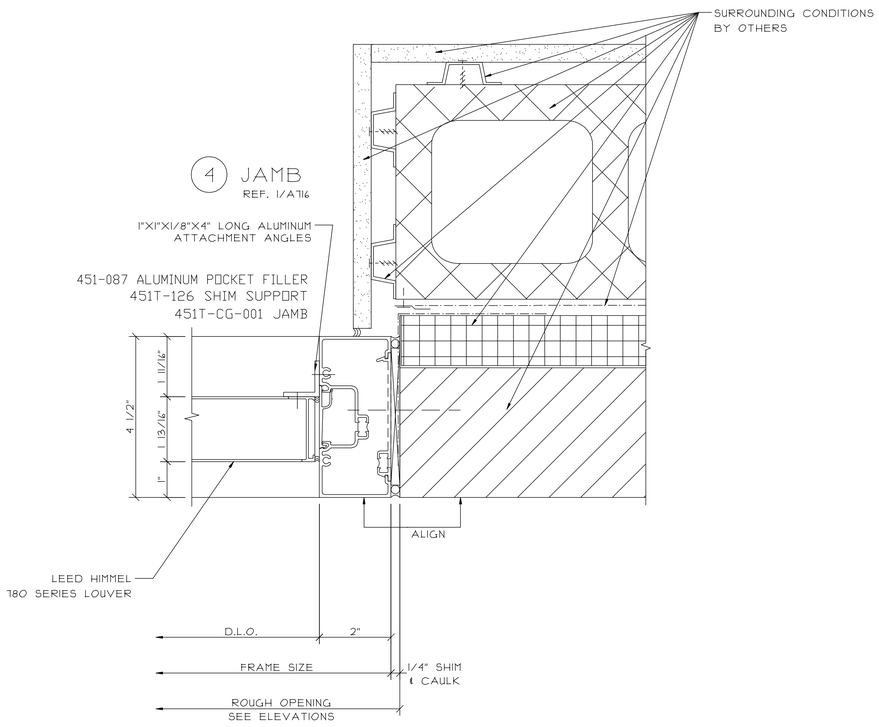

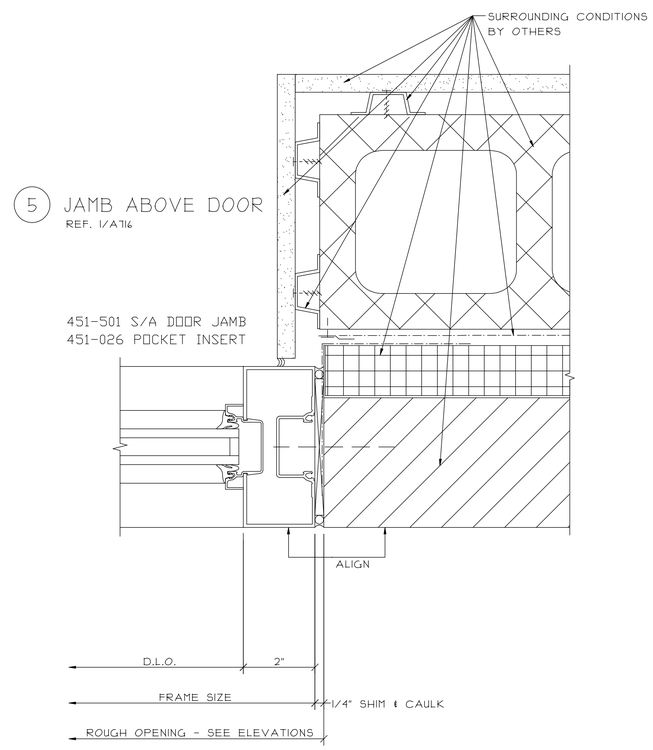

DATE:	REVISIONS:

GLAZING CONTRACTOR:
SAMPLE SAMPLE SAMPLE
SAMPLE SAMPLE SAMPLE
SAMPLE SAMPLE SAMPLE
SAMPLE SAMPLE SAMPLE
SAMPLE SAMPLE SAMPLE
SAMPLE SAMPLE SAMPLE

ARCHITECT:
SAMPLE SAMPLE SAMPLE
SAMPLE SAMPLE SAMPLE
SAMPLE SAMPLE SAMPLE
SAMPLE SAMPLE SAMPLE
SAMPLE SAMPLE SAMPLE

PROJECT: SAMPLE SAMPLE SAMPLE

LOCATION: SAMPLE SAMPLE SAMPLE

SCALE: 6" = 1'-0"

DATE: SAMPLE

DRAWN: SAMPLE

PAGE: 19 of 47

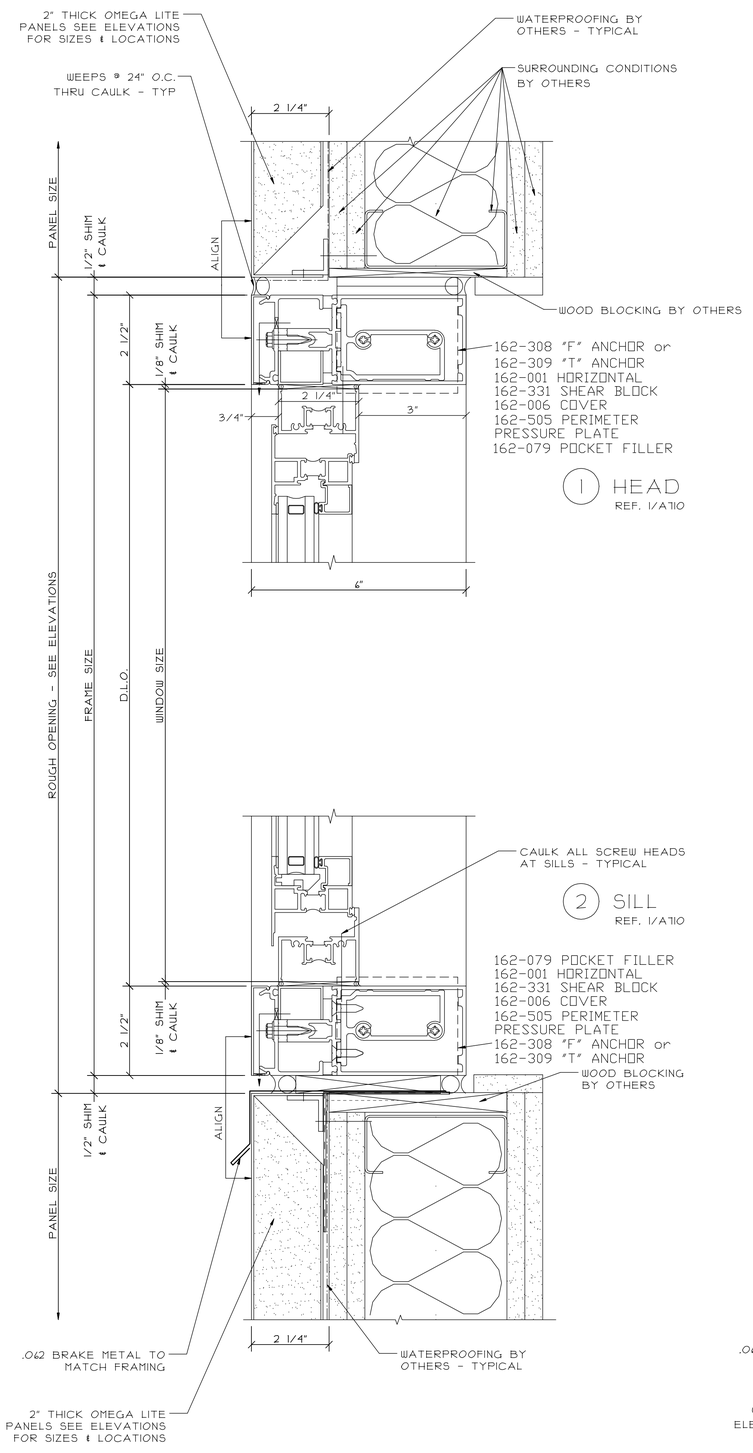

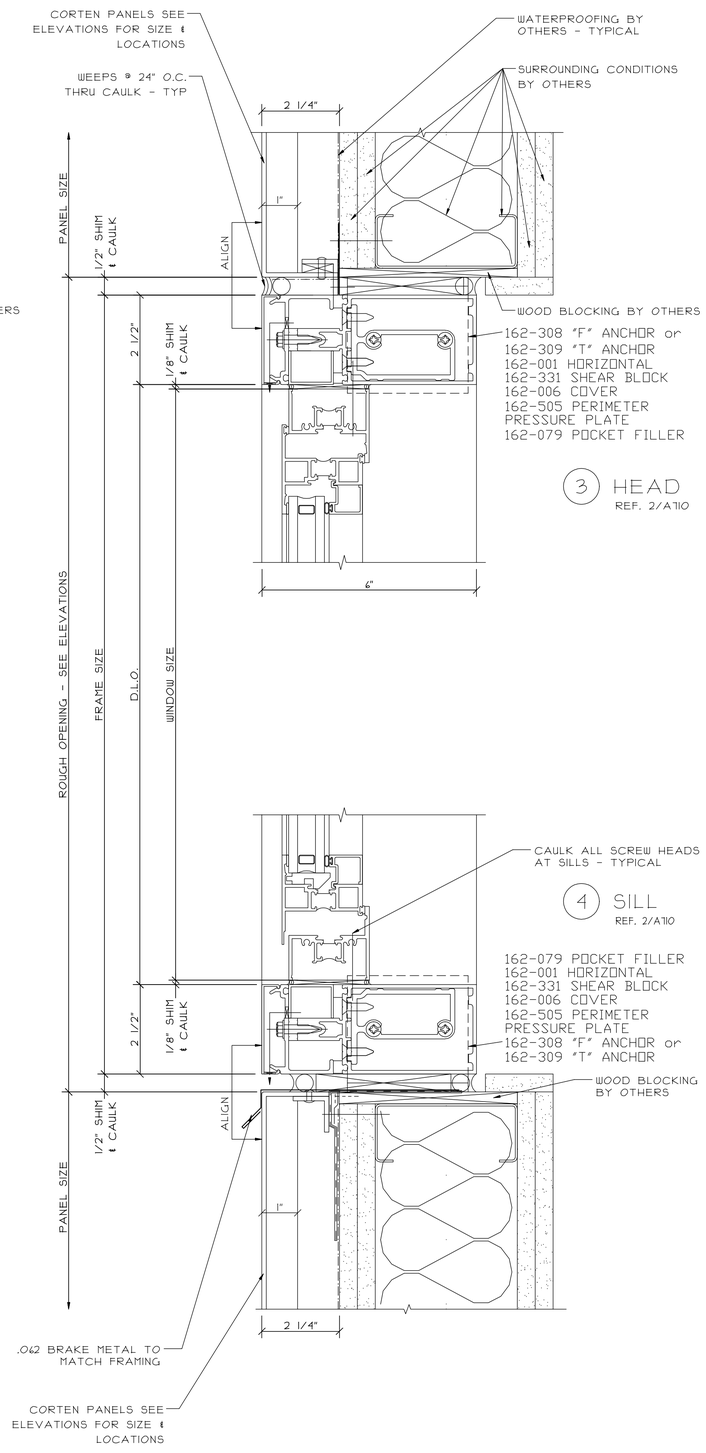

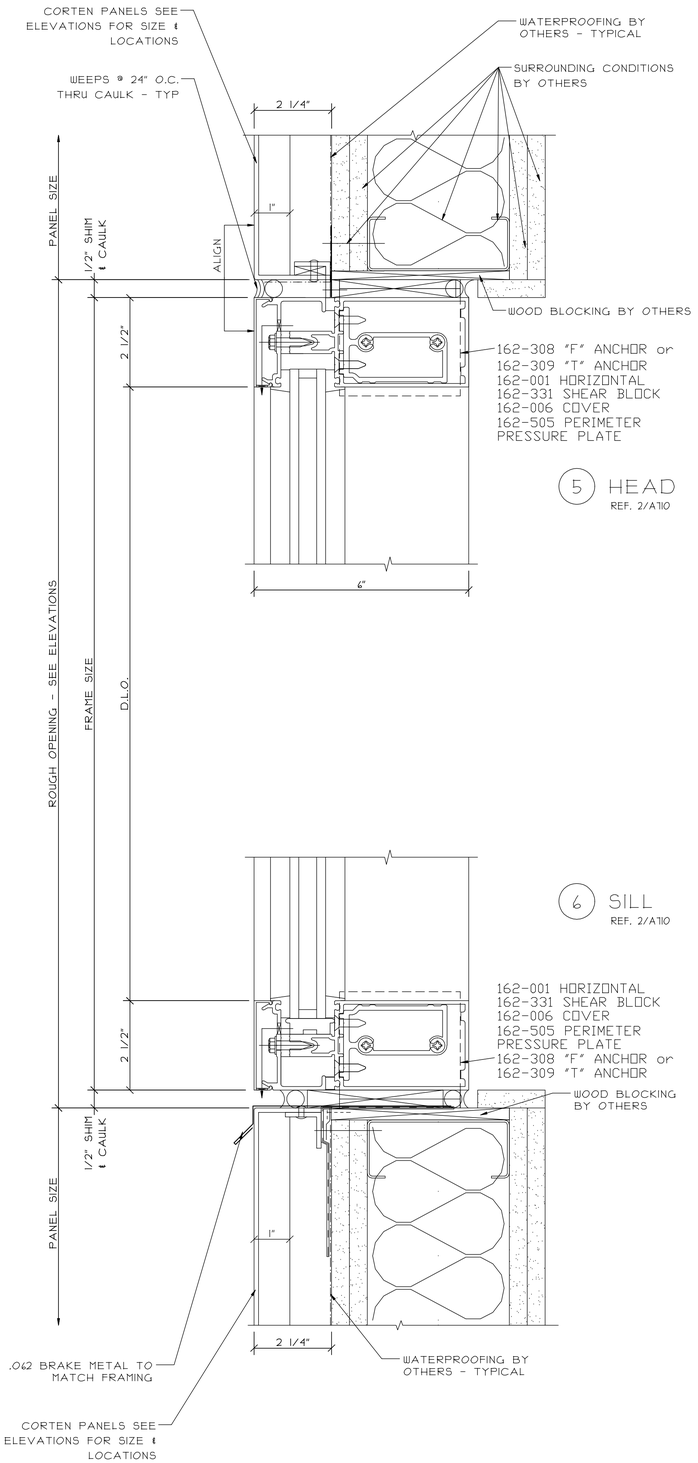

DATE:	REVISIONS:

GLAZING CONTRACTOR:
SAMPLE SAMPLE SAMPLE
SAMPLE SAMPLE SAMPLE
SAMPLE SAMPLE SAMPLE
SAMPLE SAMPLE SAMPLE
SAMPLE SAMPLE SAMPLE

ARCHITECT:
SAMPLE SAMPLE SAMPLE
SAMPLE SAMPLE SAMPLE
SAMPLE SAMPLE SAMPLE
SAMPLE SAMPLE SAMPLE
SAMPLE SAMPLE SAMPLE

PROJECT: SAMPLE SAMPLE SAMPLE

LOCATION: SAMPLE SAMPLE SAMPLE

SCALE: 6" = 1'-0"

DATE: SAMPLE

DRAWN: SAMPLE

PAGE: 20 of 47

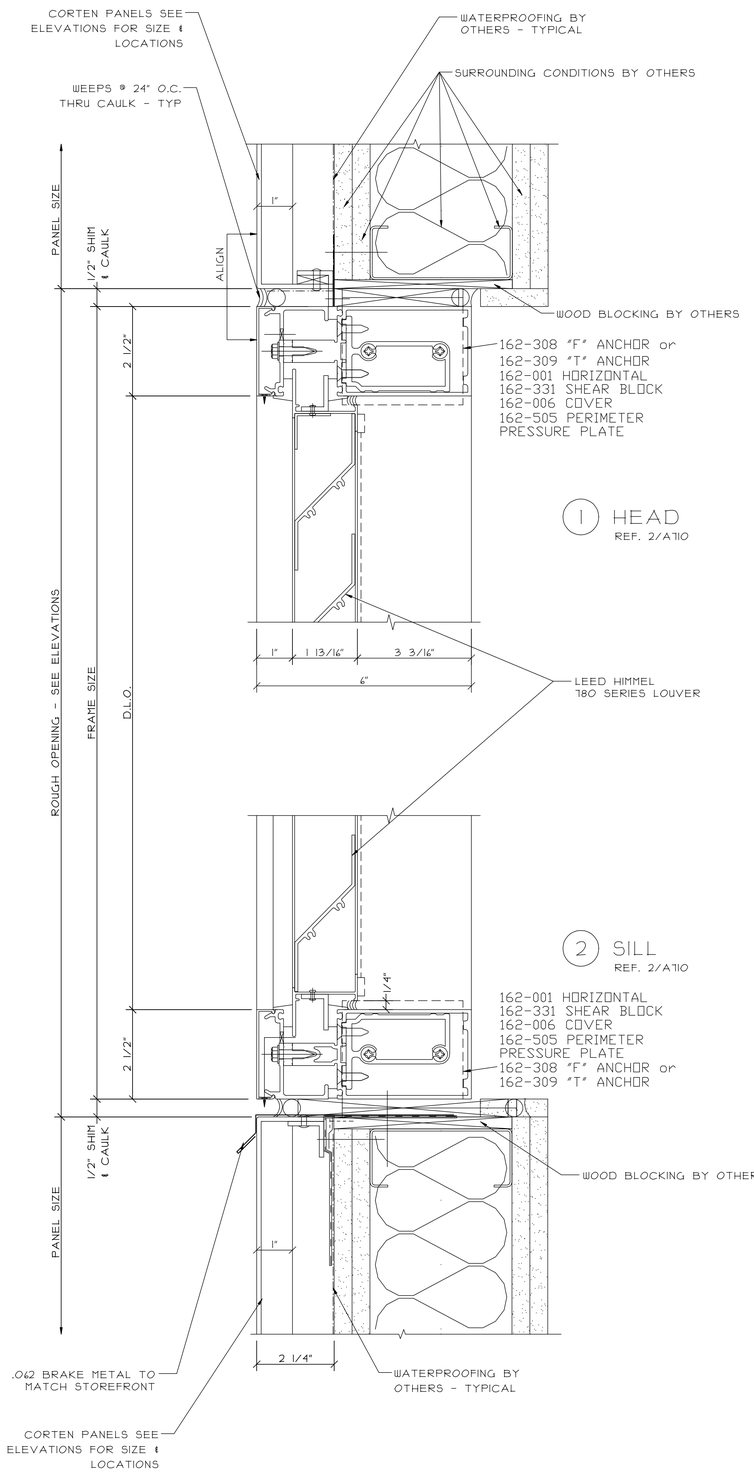

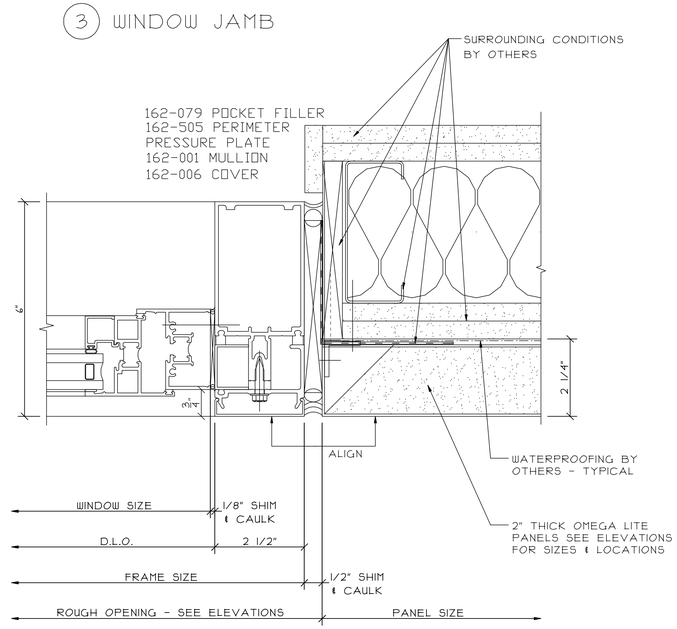

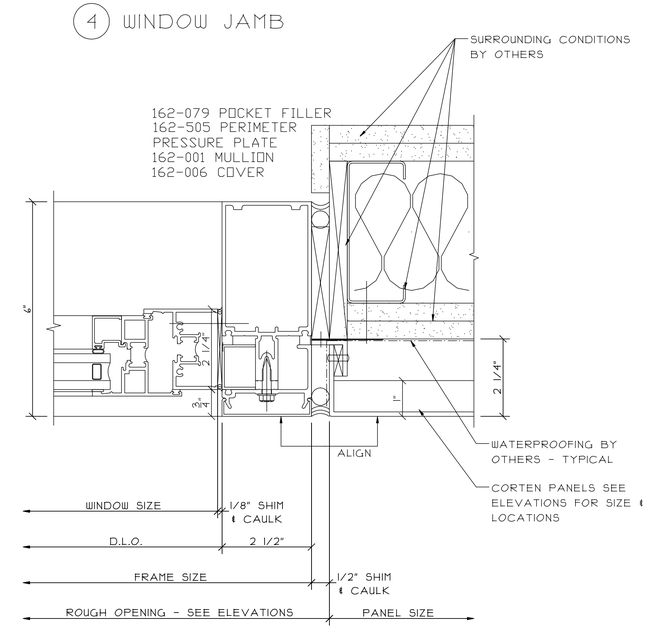

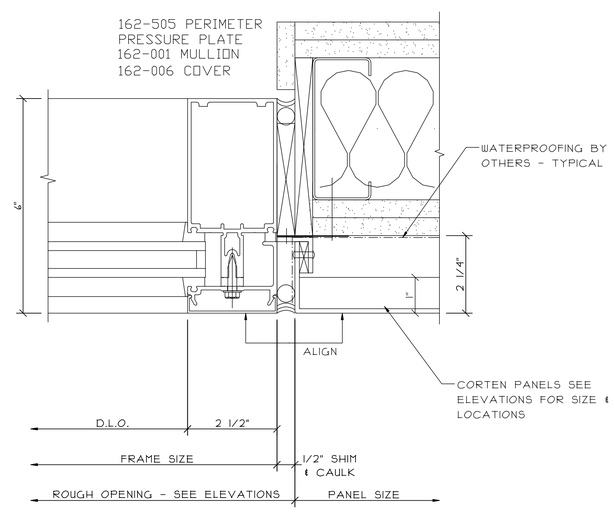

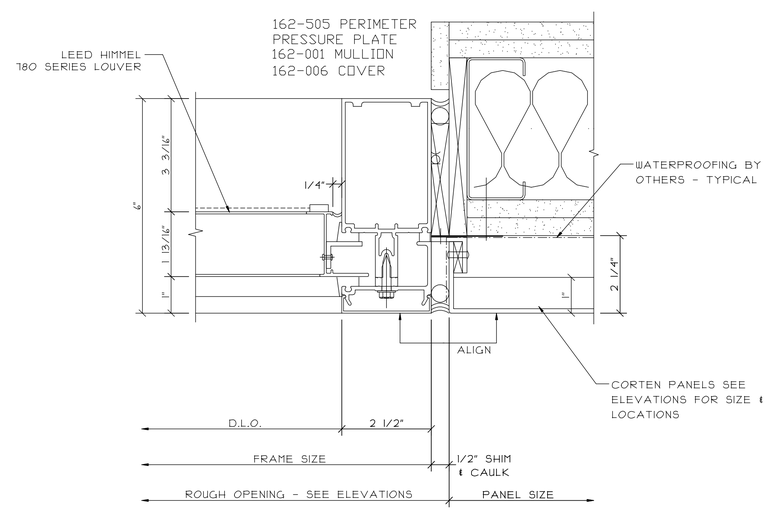

DATE:	REVISIONS:

GLAZING CONTRACTOR: SAMPLE SAMPLE SAMPLE
SAMPLE SAMPLE SAMPLE
SAMPLE SAMPLE SAMPLE
SAMPLE SAMPLE SAMPLE
SAMPLE SAMPLE SAMPLE
SAMPLE SAMPLE SAMPLE

ARCHITECT: SAMPLE SAMPLE SAMPLE
SAMPLE SAMPLE SAMPLE
SAMPLE SAMPLE SAMPLE
SAMPLE SAMPLE SAMPLE
SAMPLE SAMPLE SAMPLE
SAMPLE SAMPLE SAMPLE

PROJECT: SAMPLE SAMPLE SAMPLE

LOCATION: SAMPLE SAMPLE SAMPLE

SCALE: 6" = 1'-0"

DATE: SAMPLE

DRAWN: SAMPLE

PAGE: 21 of 47

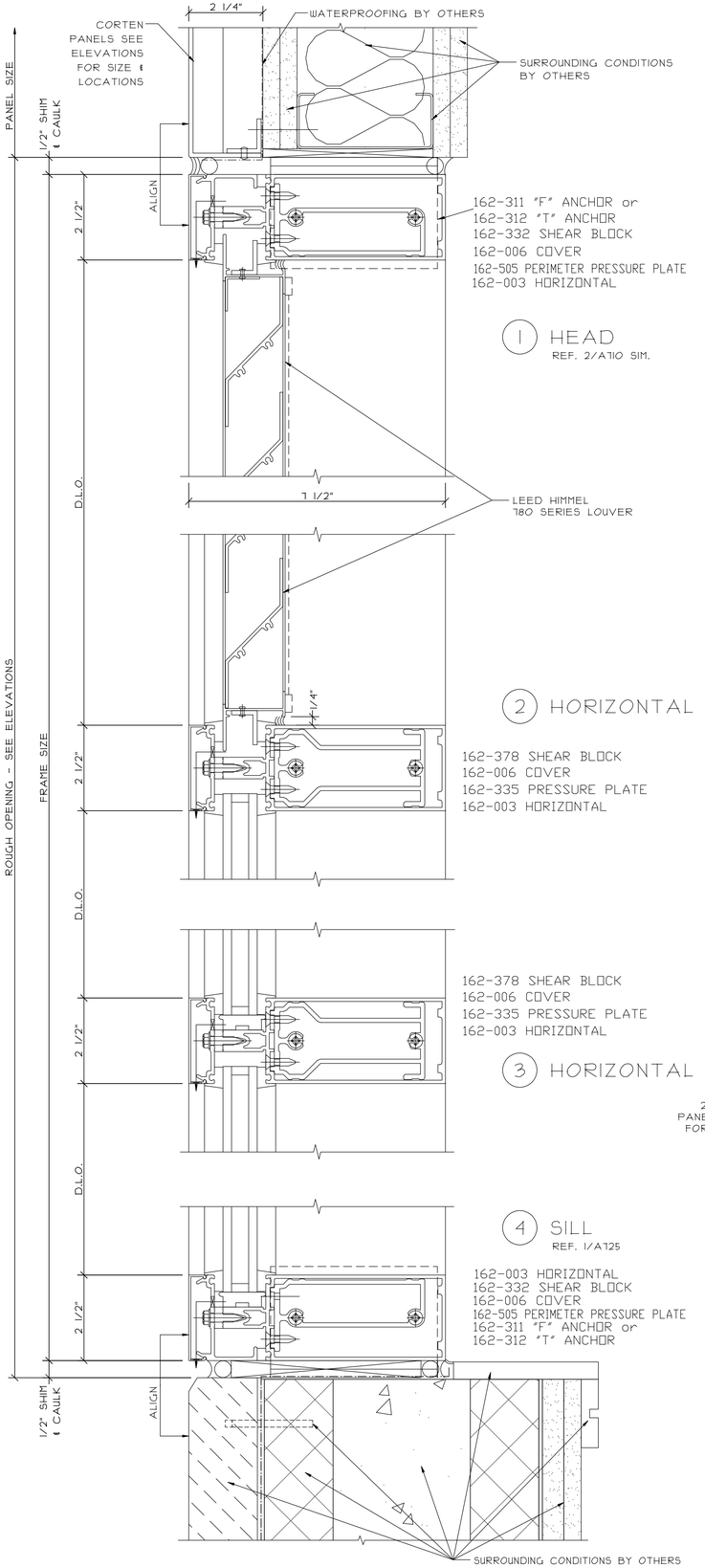

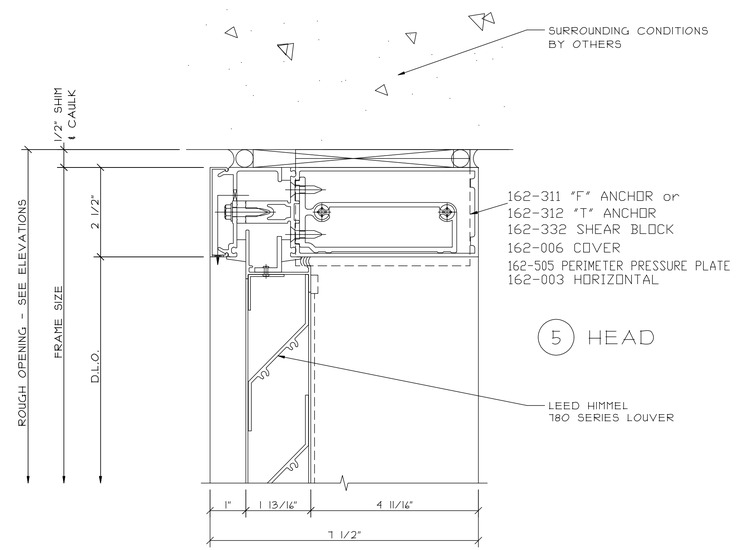

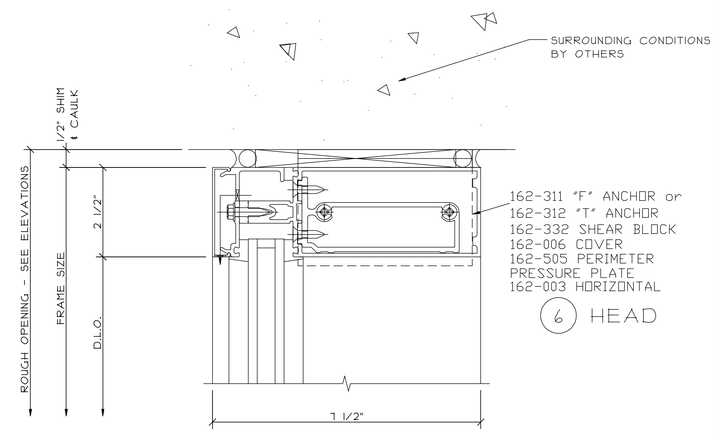

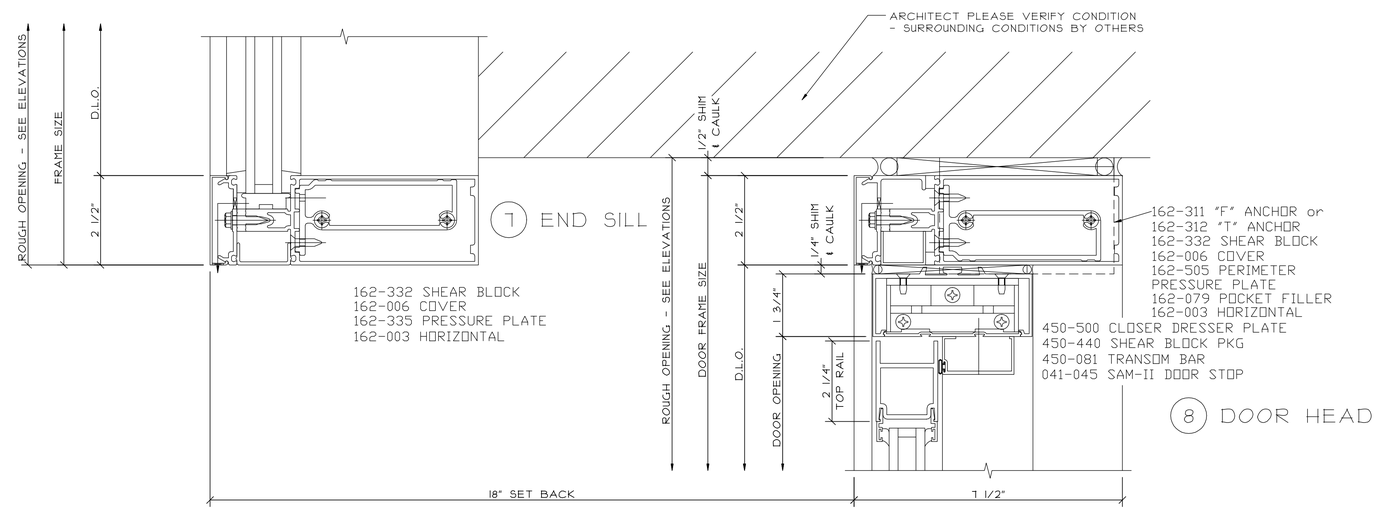

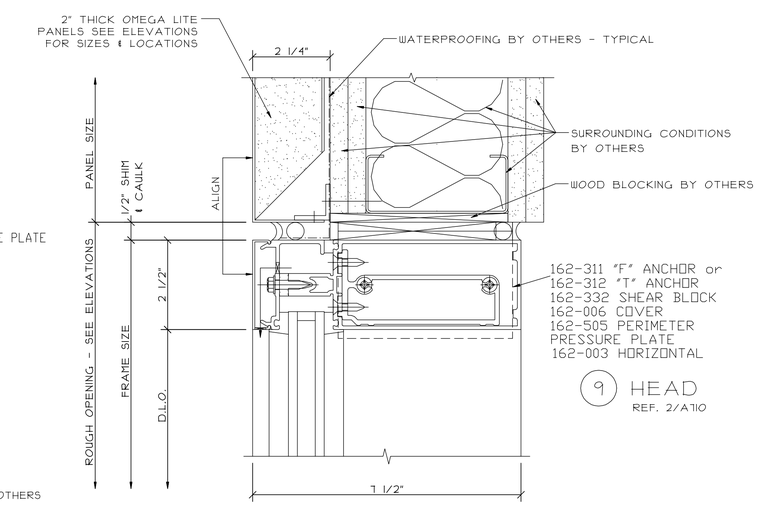

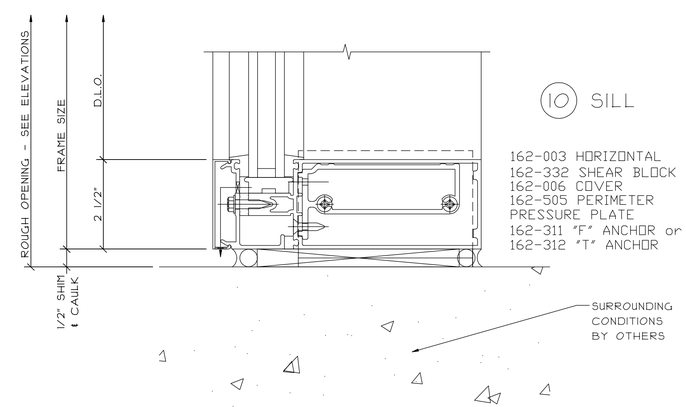

REVISIONS:	DATE:

GLAZING CONTRACTOR: SAMPLE SAMPLE SAMPLE
SAMPLE SAMPLE SAMPLE
SAMPLE SAMPLE SAMPLE
SAMPLE SAMPLE SAMPLE
SAMPLE SAMPLE SAMPLE

ARCHITECT: SAMPLE SAMPLE SAMPLE
SAMPLE SAMPLE SAMPLE
SAMPLE SAMPLE SAMPLE
SAMPLE SAMPLE SAMPLE
SAMPLE SAMPLE SAMPLE

PROJECT: SAMPLE SAMPLE SAMPLE

LOCATION: SAMPLE SAMPLE SAMPLE

SCALE: 6" = 1'-0"

DATE: SAMPLE

DRAWN: SAMPLE

PAGE: 22 of 47

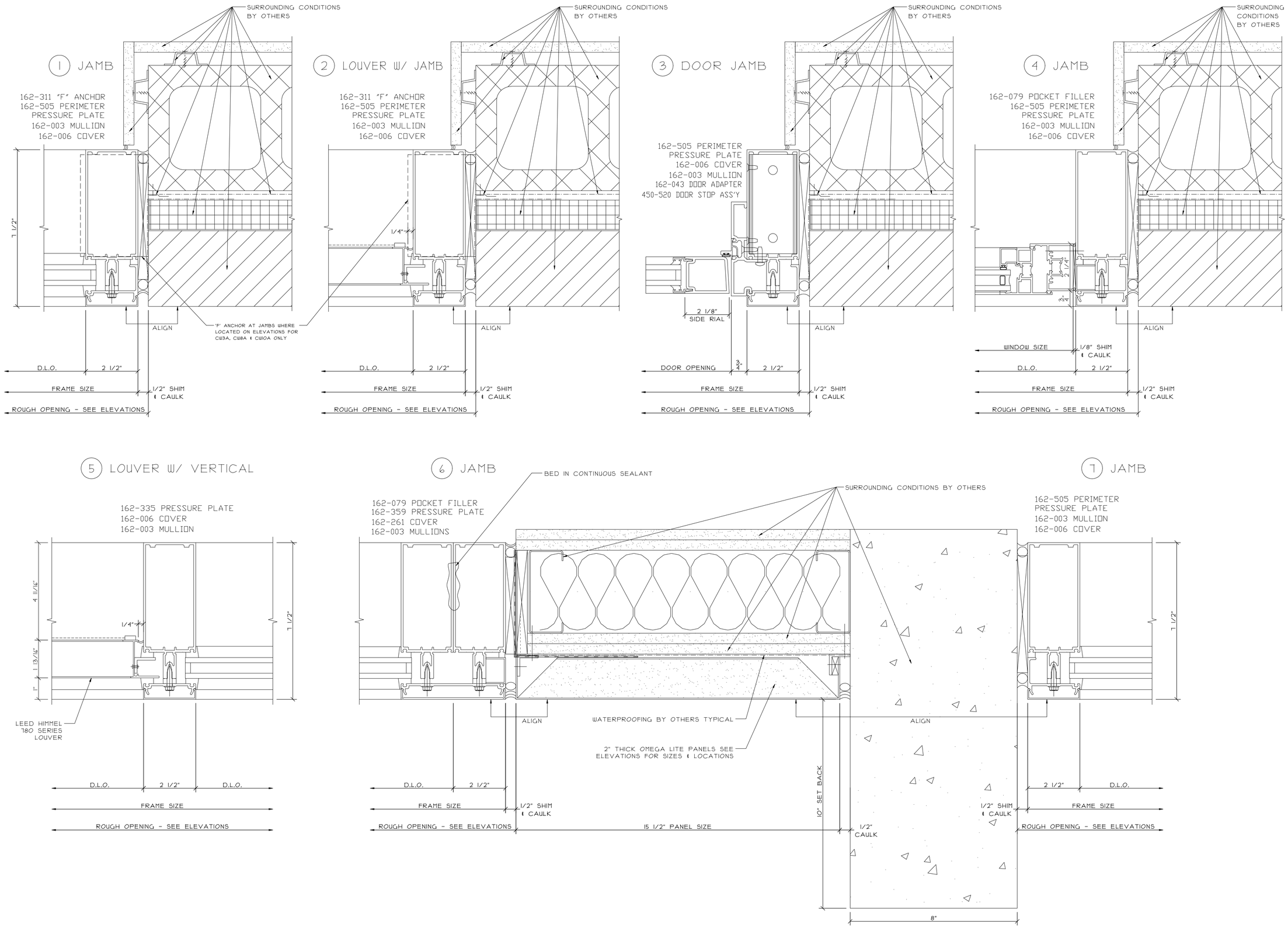

DATE:

REVISIONS:

GLAZING CONTRACTOR: SAMPLE SAMPLE SAMPLE
SAMPLE SAMPLE SAMPLE
SAMPLE SAMPLE SAMPLE
SAMPLE SAMPLE SAMPLE
SAMPLE SAMPLE SAMPLE
SAMPLE SAMPLE SAMPLE

ARCHITECT: SAMPLE SAMPLE SAMPLE
SAMPLE SAMPLE SAMPLE
SAMPLE SAMPLE SAMPLE
SAMPLE SAMPLE SAMPLE
SAMPLE SAMPLE SAMPLE

PROJECT: SAMPLE SAMPLE SAMPLE

LOCATION: SAMPLE SAMPLE SAMPLE

SCALE: 6" = 1'-0"

DATE: SAMPLE

DRAWN: SAMPLE

PAGE: 23 of 47

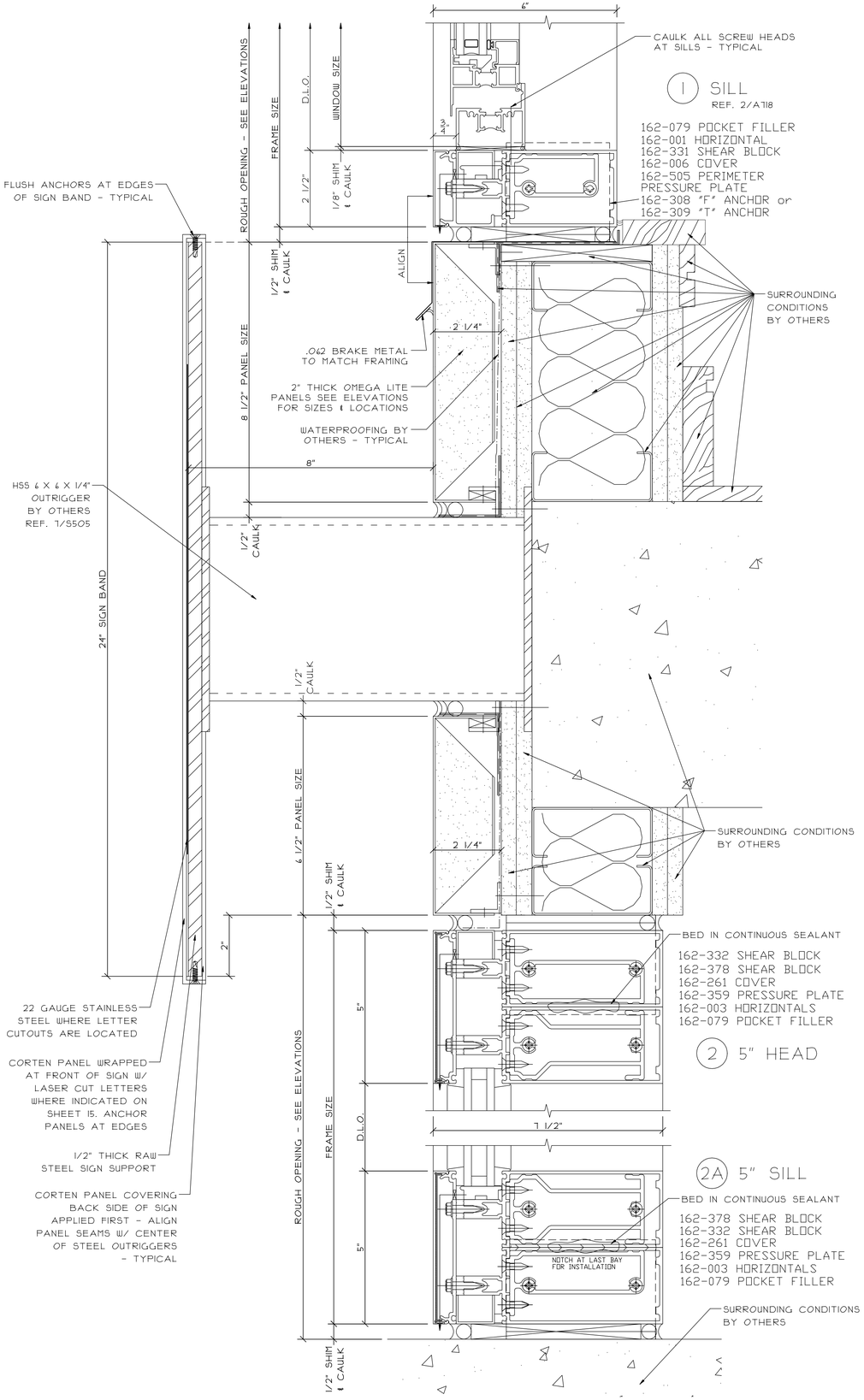

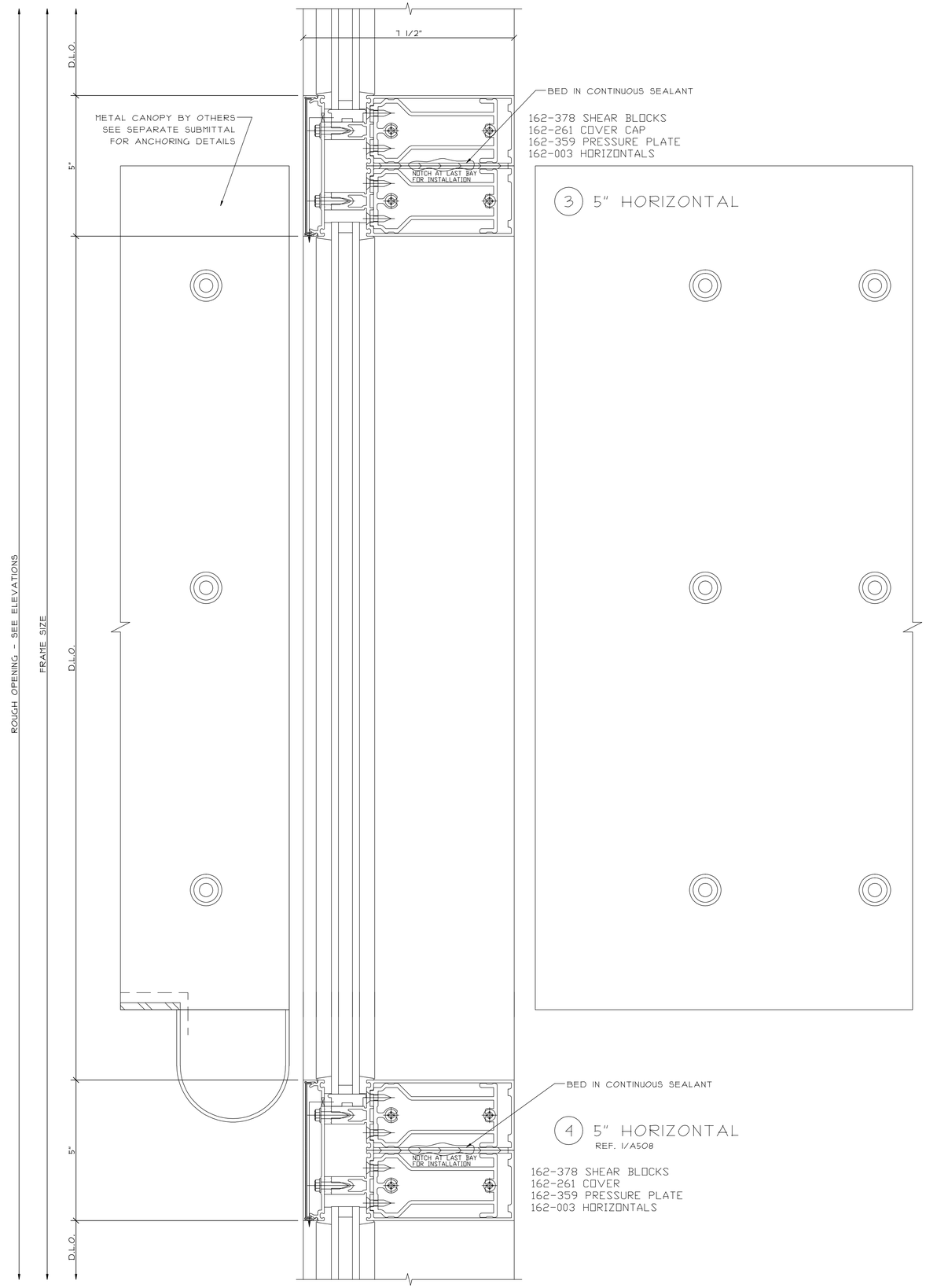

DATE:	
REVISIONS:	
GLAZING CONTRACTOR:	SAMPLE SAMPLE SAMPLE SAMPLE SAMPLE SAMPLE SAMPLE SAMPLE SAMPLE SAMPLE SAMPLE SAMPLE SAMPLE SAMPLE SAMPLE
ARCHITECT:	SAMPLE SAMPLE SAMPLE SAMPLE SAMPLE SAMPLE SAMPLE SAMPLE SAMPLE SAMPLE SAMPLE SAMPLE SAMPLE SAMPLE SAMPLE
PROJECT:	SAMPLE SAMPLE SAMPLE
LOCATION:	SAMPLE SAMPLE SAMPLE
SCALE:	6" = 1'-0"
DATE:	SAMPLE
DRAWN:	SAMPLE
PAGE:	24 of 47

1 VERTICAL MULLION

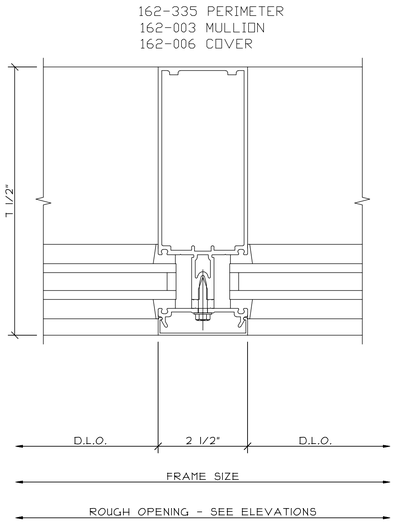

2 TRANSOM W/ DOOR HEAD

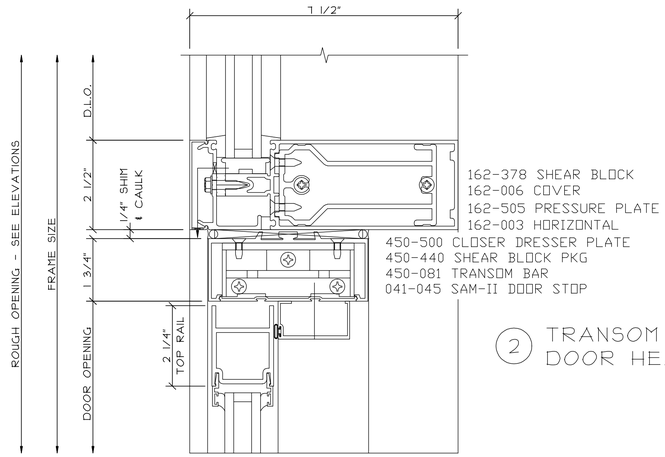

3 DOOR JAMB W/ SIDELIGHT

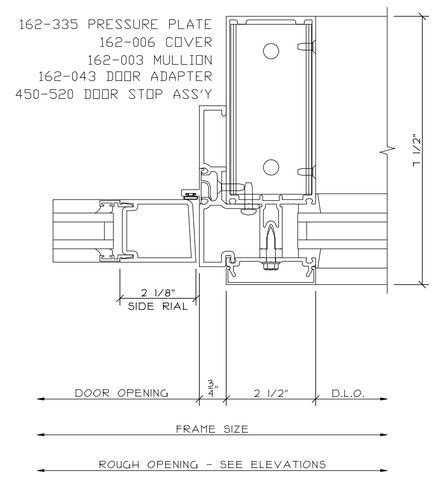

3A DOOR BOTTOM

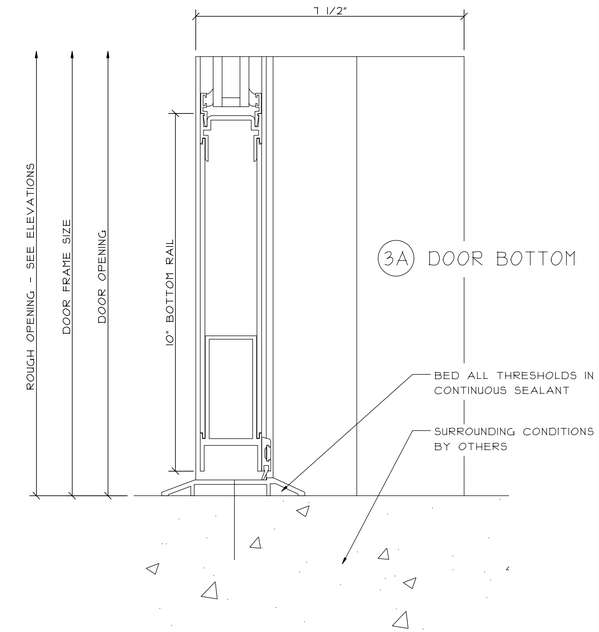

4 JAMB

REF. 3/A714

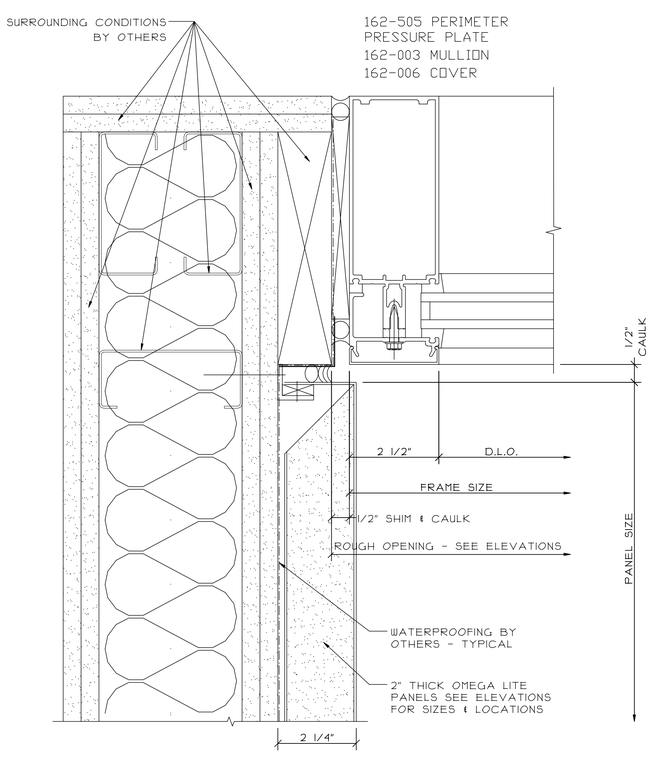

5 JAMB

REF. 3/A714 (SIM.)

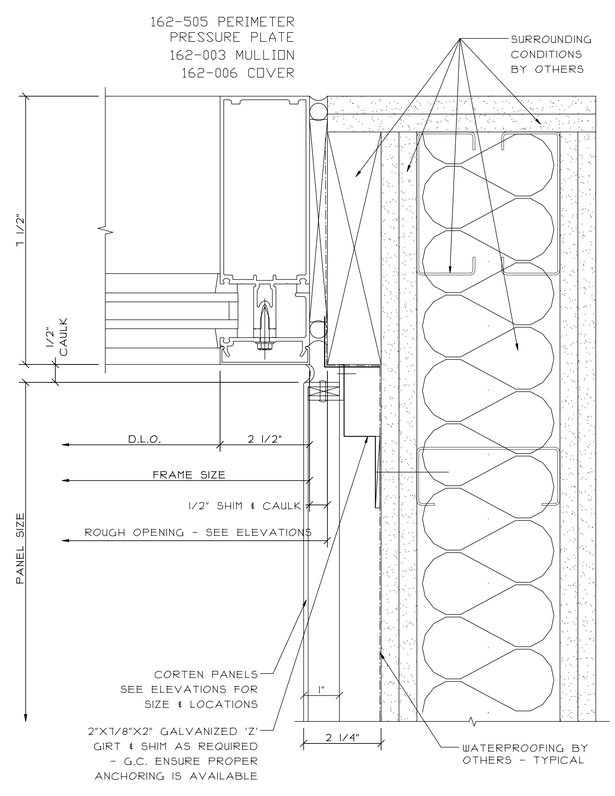

6 LOUVER W/ JAMB

REF. 3/A714 (SIM.)

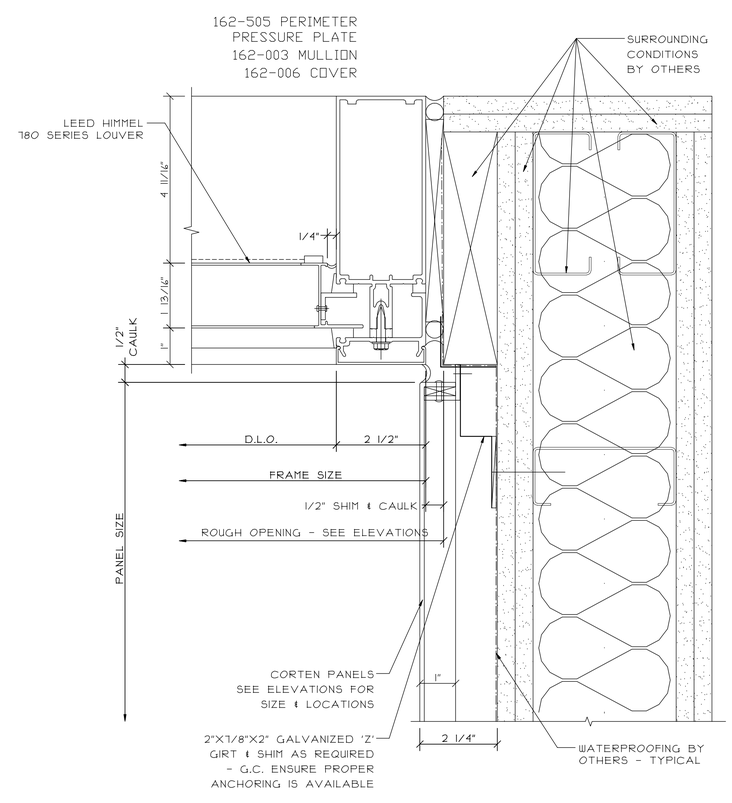

DATE:	REVISIONS:

GLAZING CONTRACTOR: SAMPLE SAMPLE SAMPLE
SAMPLE SAMPLE SAMPLE
SAMPLE SAMPLE SAMPLE
SAMPLE SAMPLE SAMPLE
SAMPLE SAMPLE SAMPLE

ARCHITECT: SAMPLE SAMPLE SAMPLE
SAMPLE SAMPLE SAMPLE
SAMPLE SAMPLE SAMPLE
SAMPLE SAMPLE SAMPLE
SAMPLE SAMPLE SAMPLE

PROJECT: SAMPLE SAMPLE SAMPLE

LOCATION: SAMPLE SAMPLE SAMPLE

SCALE: 6" = 1'-0"

DATE: SAMPLE

DRAWN: SAMPLE

PAGE: 25 of 47

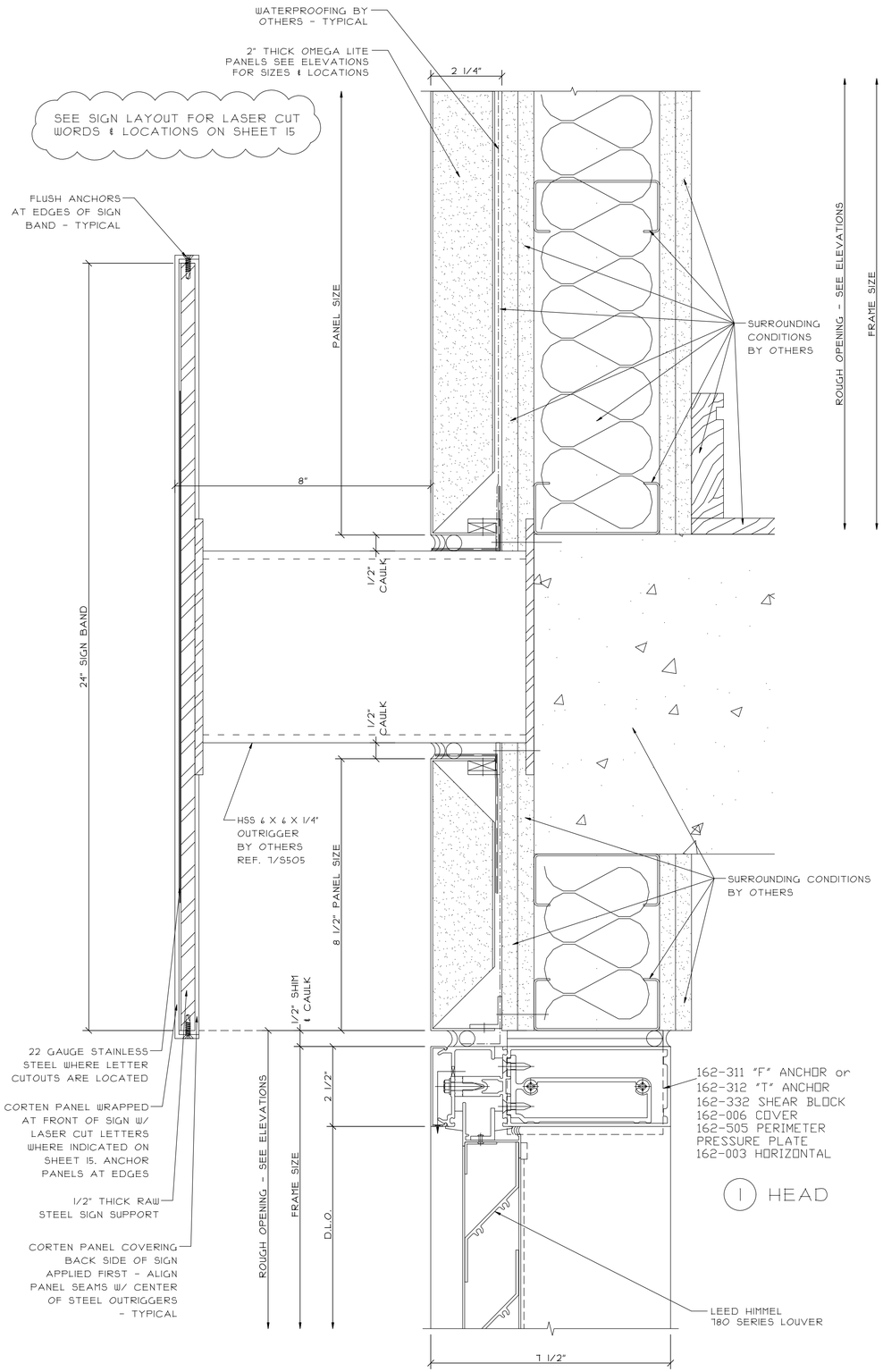

1 HEAD

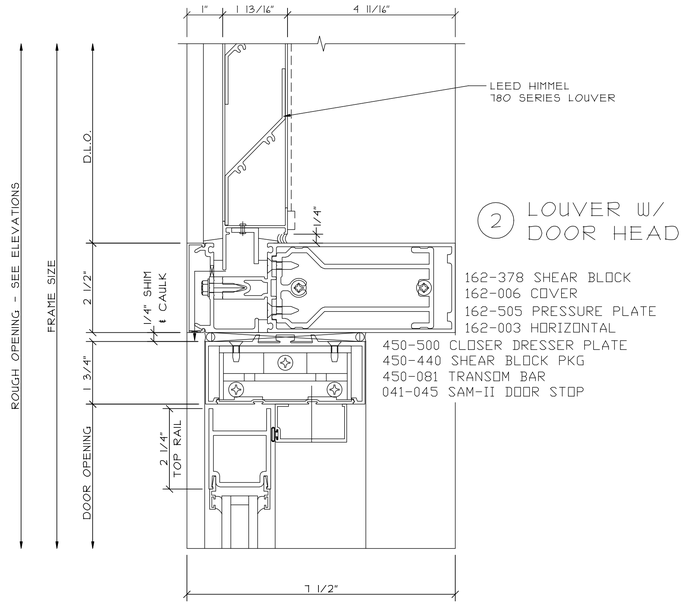

2 LOUVER W/ DOOR HEAD

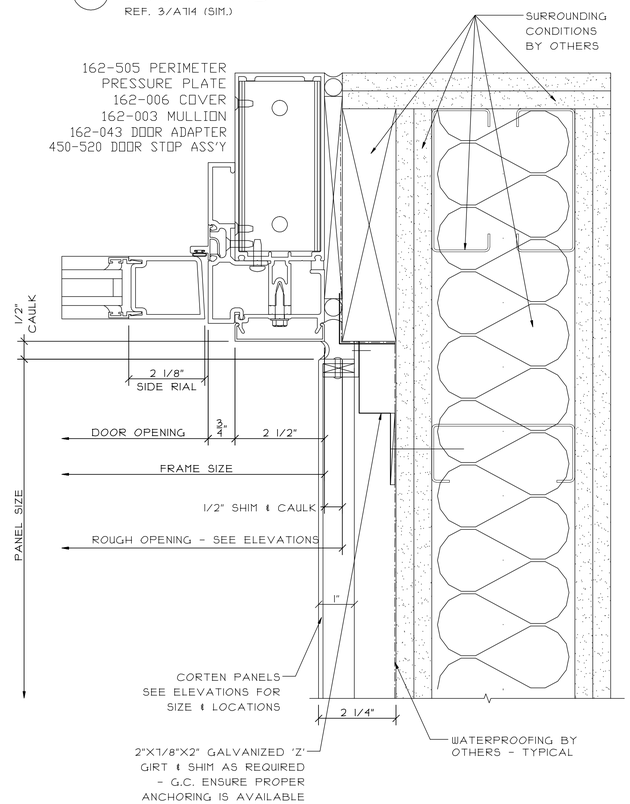

3 DOOR JAMB
REF. 3/A714 (SIM.)

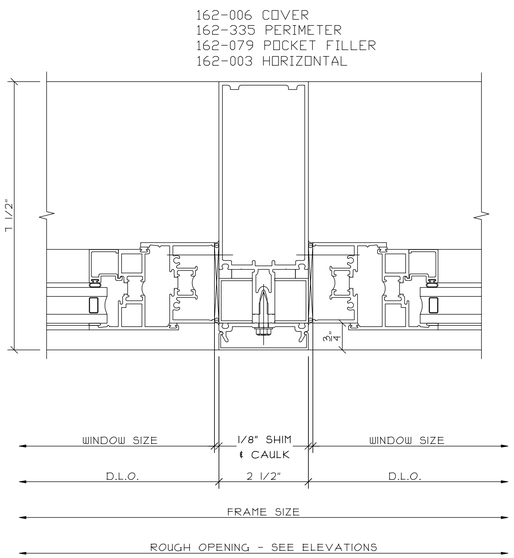

4 DOUBLE WINDOW VERTICAL

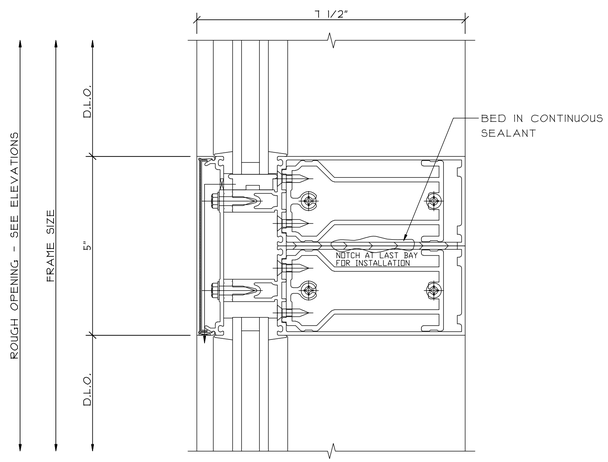

5 5" HORIZONTAL

DATE:	
REVISIONS:	
GLAZING CONTRACTOR:	SAMPLE SAMPLE SAMPLE SAMPLE SAMPLE SAMPLE SAMPLE SAMPLE SAMPLE SAMPLE SAMPLE SAMPLE SAMPLE SAMPLE SAMPLE
ARCHITECT:	SAMPLE SAMPLE SAMPLE SAMPLE SAMPLE SAMPLE SAMPLE SAMPLE SAMPLE SAMPLE SAMPLE SAMPLE SAMPLE SAMPLE SAMPLE
PROJECT:	SAMPLE SAMPLE SAMPLE
LOCATION:	SAMPLE SAMPLE SAMPLE
SCALE:	
DATE:	SAMPLE
DRAWN:	SAMPLE
PAGE:	26 of 47

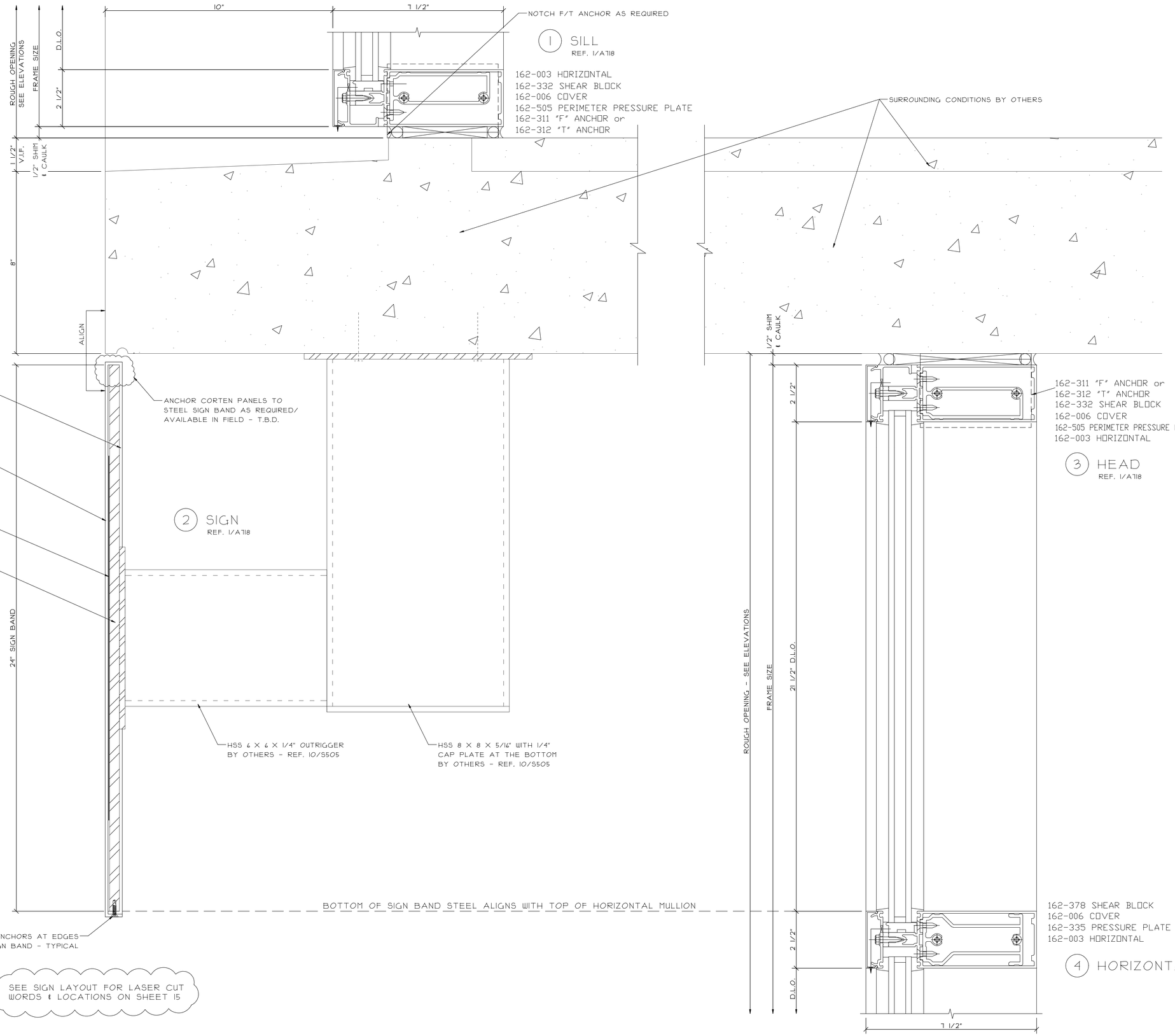

REVISIONS:	DATE:

GLAZING CONTRACTOR:
SAMPLE SAMPLE SAMPLE
SAMPLE SAMPLE SAMPLE
SAMPLE SAMPLE SAMPLE
SAMPLE SAMPLE SAMPLE
SAMPLE SAMPLE SAMPLE
SAMPLE SAMPLE SAMPLE

ARCHITECT:
SAMPLE SAMPLE SAMPLE
SAMPLE SAMPLE SAMPLE
SAMPLE SAMPLE SAMPLE
SAMPLE SAMPLE SAMPLE
SAMPLE SAMPLE SAMPLE
SAMPLE SAMPLE SAMPLE

PROJECT: SAMPLE SAMPLE SAMPLE

LOCATION: SAMPLE SAMPLE SAMPLE

SCALE: 6" = 1'-0"

DATE: SAMPLE

DRAWN: SAMPLE

PAGE: 27 of 47

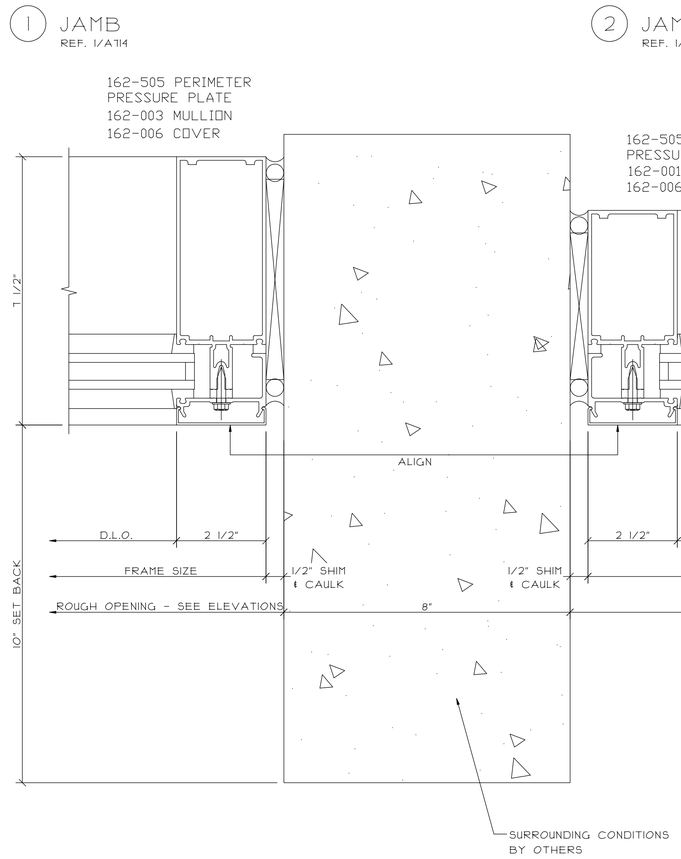

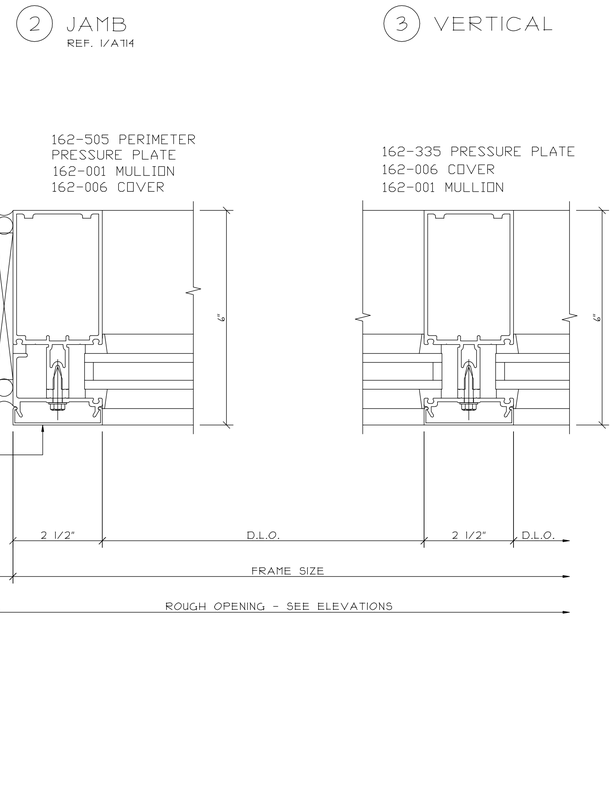

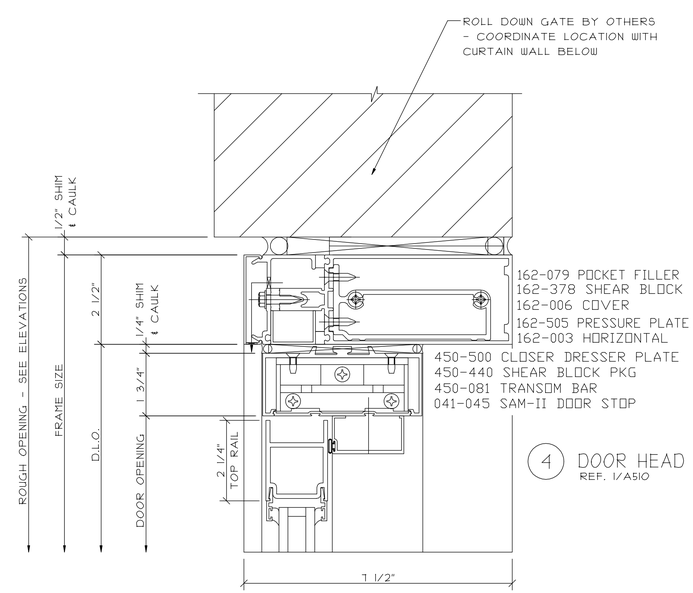

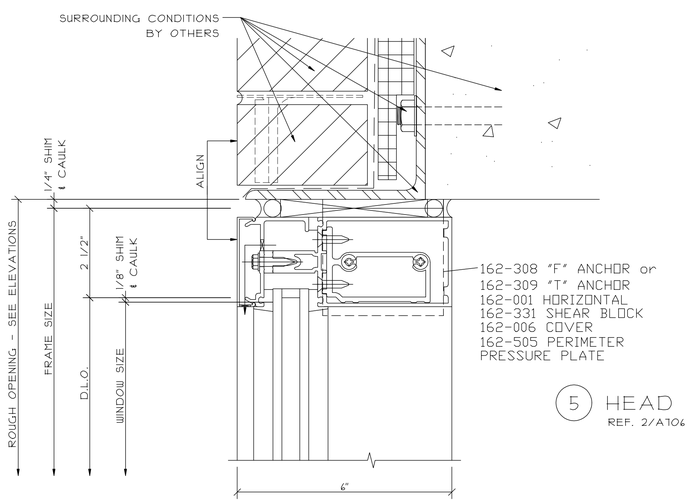

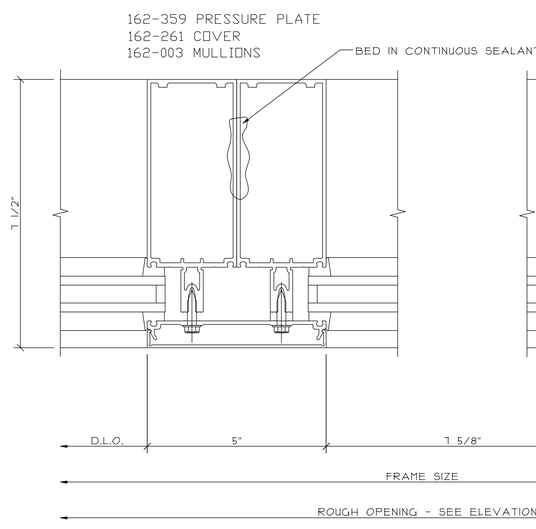

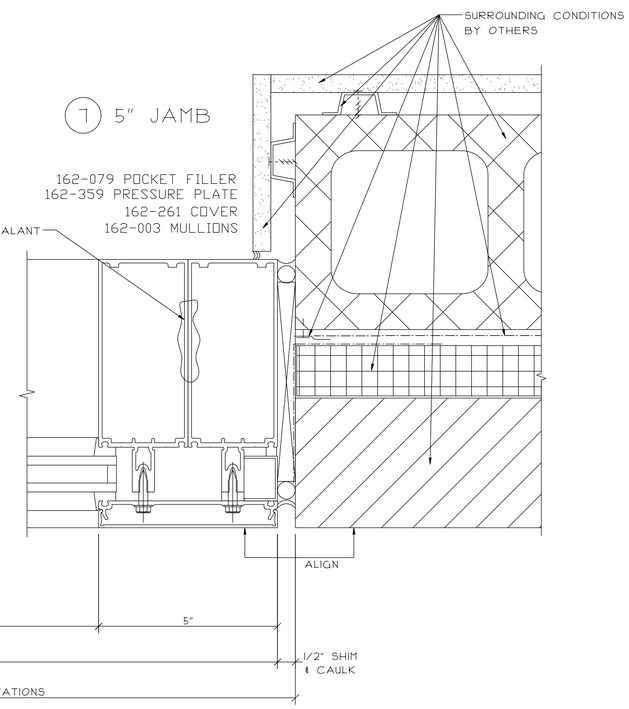

DATE:	REVISIONS:

GLAZING CONTRACTOR: SAMPLE SAMPLE SAMPLE
SAMPLE SAMPLE SAMPLE
SAMPLE SAMPLE SAMPLE
SAMPLE SAMPLE SAMPLE
SAMPLE SAMPLE SAMPLE

ARCHITECT: SAMPLE SAMPLE SAMPLE
SAMPLE SAMPLE SAMPLE
SAMPLE SAMPLE SAMPLE
SAMPLE SAMPLE SAMPLE
SAMPLE SAMPLE SAMPLE

PROJECT: SAMPLE SAMPLE SAMPLE

LOCATION: SAMPLE SAMPLE SAMPLE

SCALE: 6" = 1'-0"

DATE: SAMPLE

DRAWN: SAMPLE

PAGE: 28 of 47

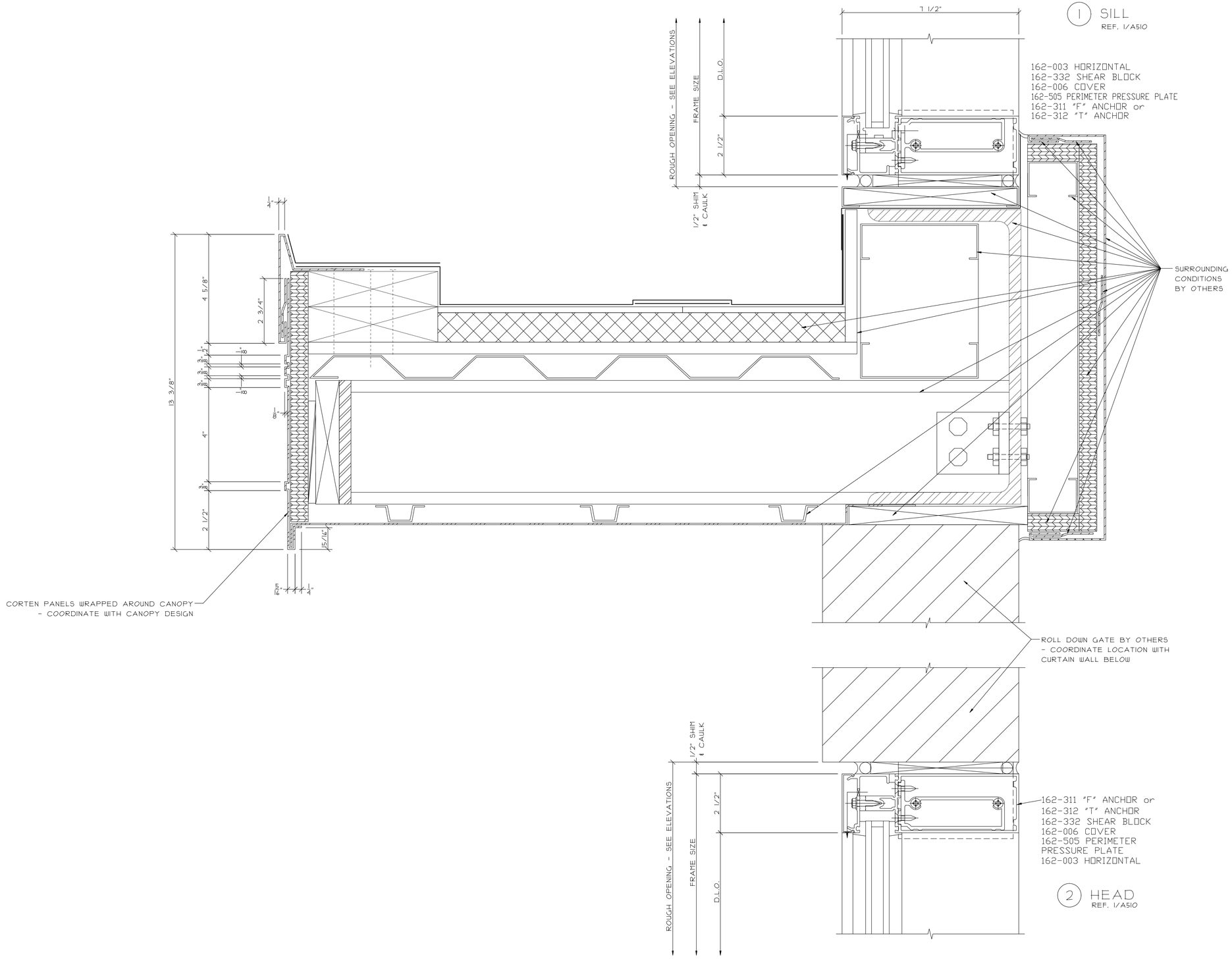

REVISIONS:	DATE:

GLAZING CONTRACTOR:
SAMPLE SAMPLE SAMPLE
SAMPLE SAMPLE SAMPLE
SAMPLE SAMPLE SAMPLE
SAMPLE SAMPLE SAMPLE
SAMPLE SAMPLE SAMPLE
SAMPLE SAMPLE SAMPLE

ARCHITECT:
SAMPLE SAMPLE SAMPLE
SAMPLE SAMPLE SAMPLE
SAMPLE SAMPLE SAMPLE
SAMPLE SAMPLE SAMPLE
SAMPLE SAMPLE SAMPLE
SAMPLE SAMPLE SAMPLE

PROJECT: SAMPLE SAMPLE SAMPLE

LOCATION: SAMPLE SAMPLE SAMPLE

SCALE: 6" = 1'-0"

DATE: SAMPLE

DRAWN: SAMPLE

PAGE: 28A of 47

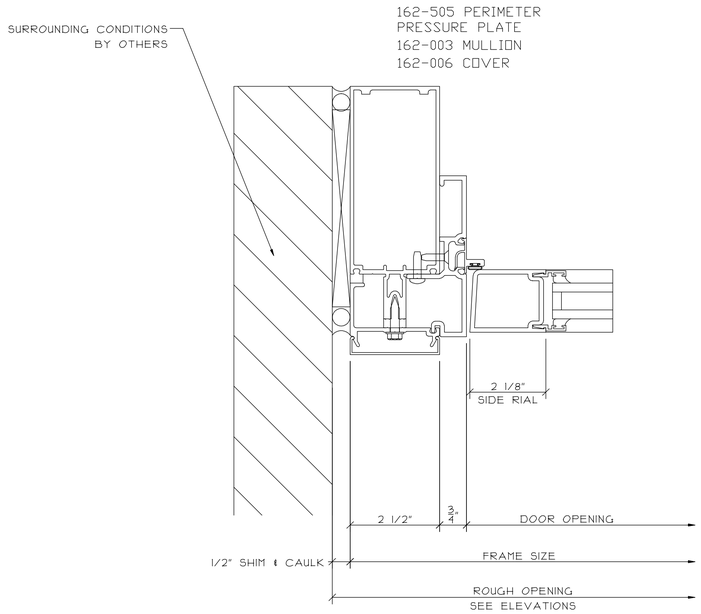

3 JAMB

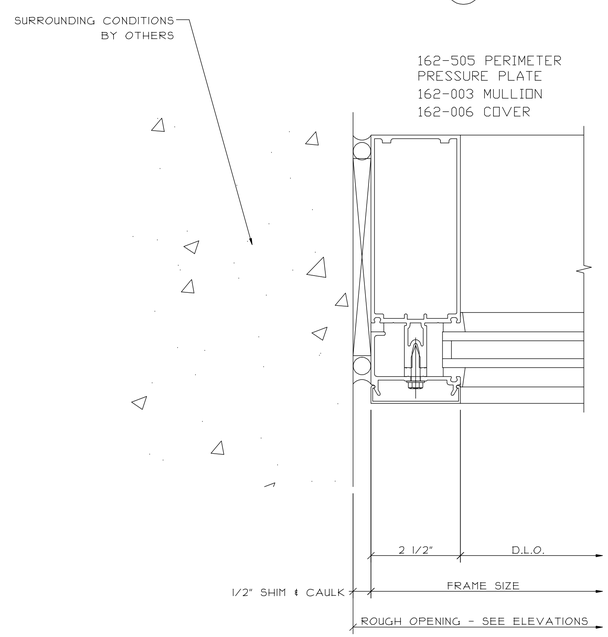

4 JAMB

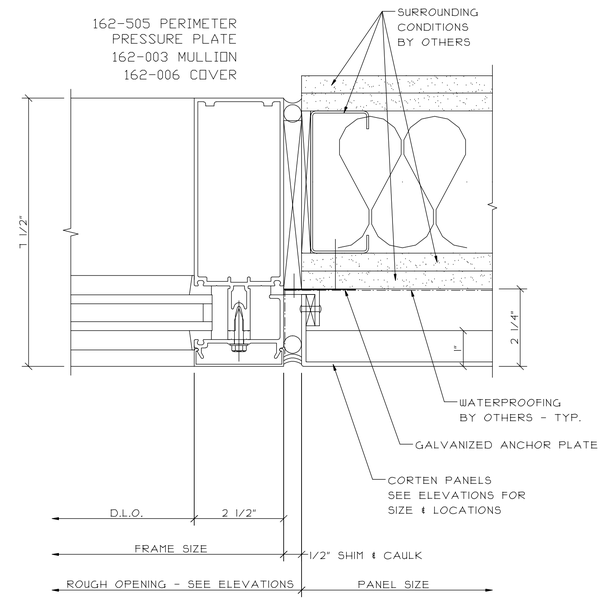

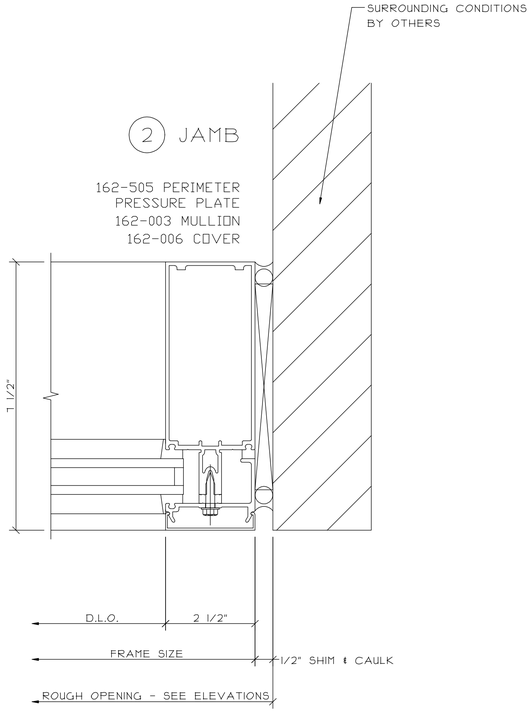

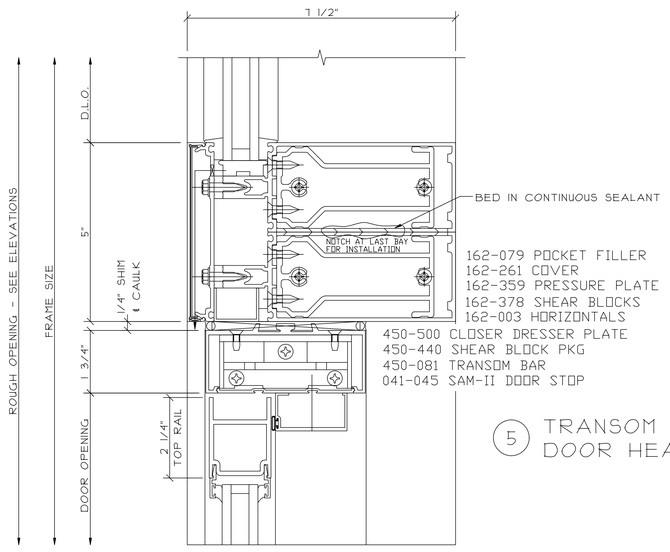

5 TRANSOM W/ DOOR HEAD

6 DOOR JAMB W/ SIDELIGHT

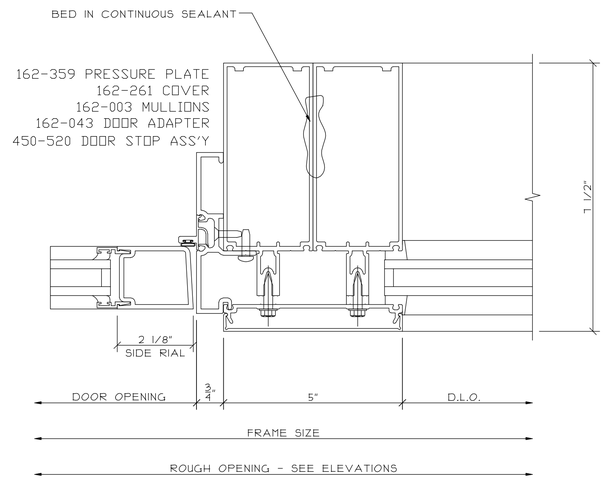

DATE:	
REVISIONS:	
GLAZING CONTRACTOR:	SAMPLE SAMPLE SAMPLE SAMPLE SAMPLE SAMPLE SAMPLE SAMPLE SAMPLE SAMPLE SAMPLE SAMPLE SAMPLE SAMPLE SAMPLE
ARCHITECT:	SAMPLE SAMPLE SAMPLE SAMPLE SAMPLE SAMPLE SAMPLE SAMPLE SAMPLE SAMPLE SAMPLE SAMPLE SAMPLE SAMPLE SAMPLE
PROJECT:	SAMPLE SAMPLE SAMPLE
LOCATION:	SAMPLE SAMPLE SAMPLE
SCALE:	6" = 1'-0"
DATE:	SAMPLE
DRAWN:	SAMPLE
PAGE:	29 of 47

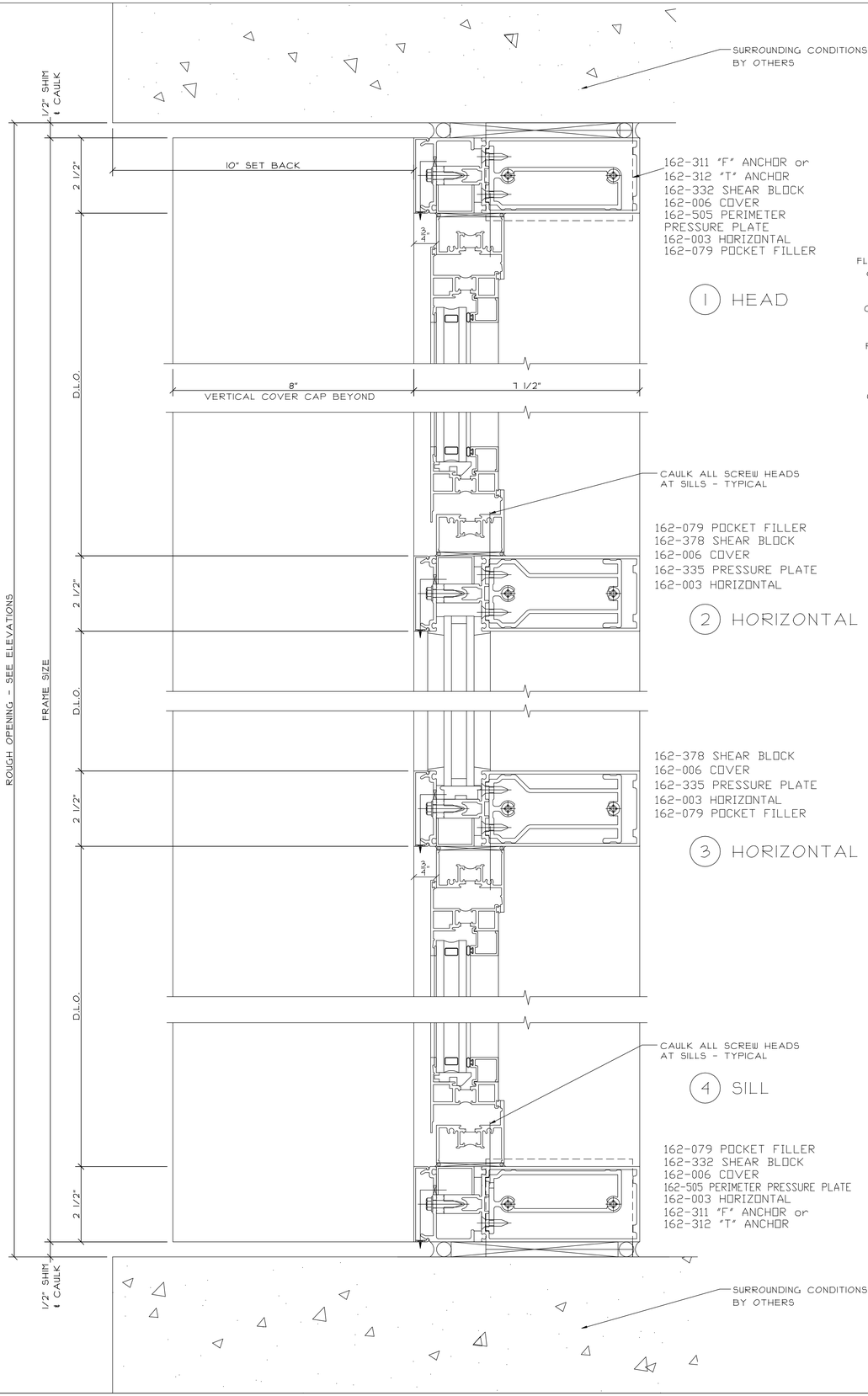

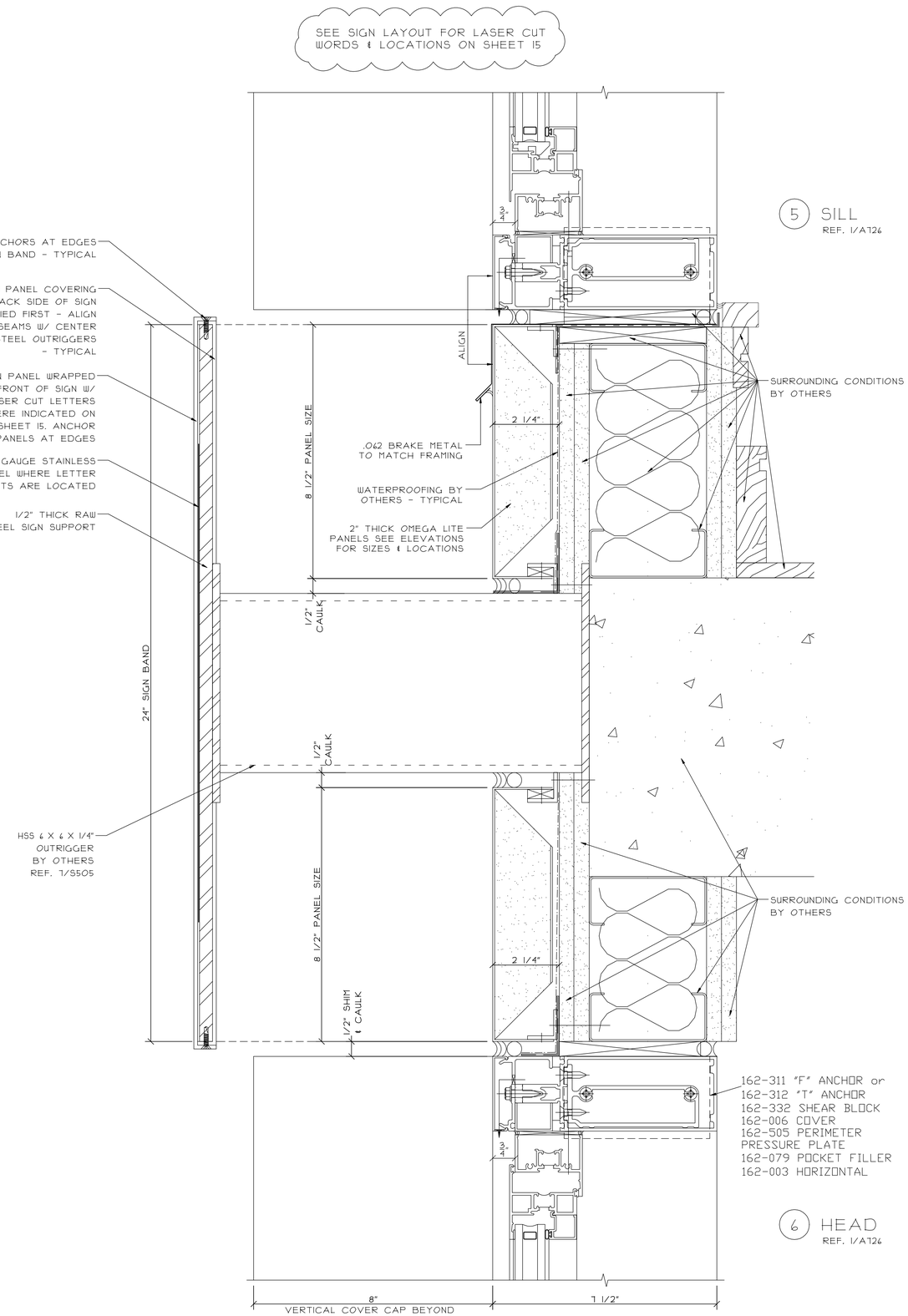

DATE:	
REVISIONS:	
GLAZING CONTRACTOR:	SAMPLE SAMPLE SAMPLE SAMPLE SAMPLE SAMPLE SAMPLE SAMPLE SAMPLE SAMPLE SAMPLE SAMPLE SAMPLE SAMPLE SAMPLE
ARCHITECT:	SAMPLE SAMPLE SAMPLE SAMPLE SAMPLE SAMPLE SAMPLE SAMPLE SAMPLE SAMPLE SAMPLE SAMPLE SAMPLE SAMPLE SAMPLE
PROJECT:	SAMPLE SAMPLE SAMPLE
LOCATION:	SAMPLE SAMPLE SAMPLE
SCALE:	6" = 1'-0"
DATE:	SAMPLE
DRAWN:	SAMPLE
PAGE:	30 of 47

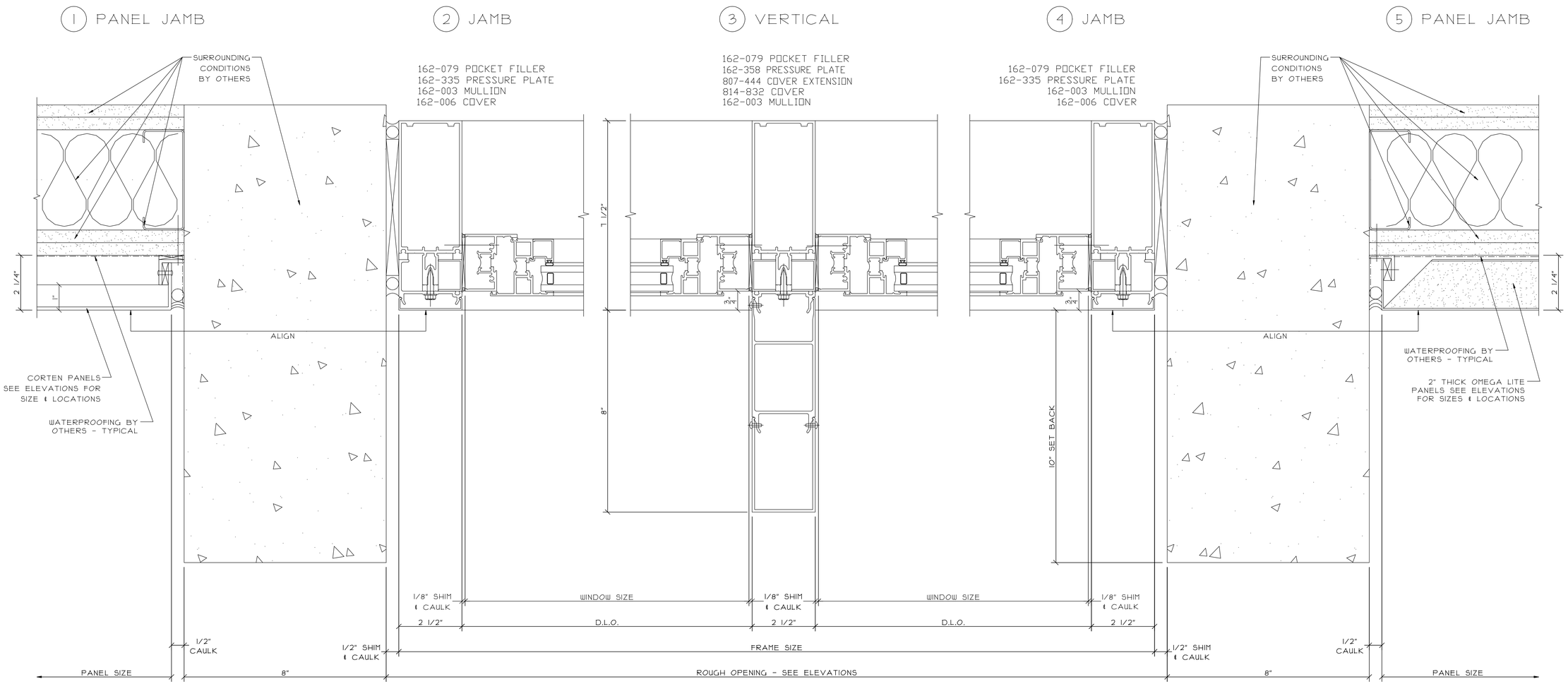

REVISIONS:	DATE:

GLAZING CONTRACTOR:
SAMPLE SAMPLE SAMPLE
SAMPLE SAMPLE SAMPLE
SAMPLE SAMPLE SAMPLE
SAMPLE SAMPLE SAMPLE
SAMPLE SAMPLE SAMPLE
SAMPLE SAMPLE SAMPLE

ARCHITECT:
SAMPLE SAMPLE SAMPLE
SAMPLE SAMPLE SAMPLE
SAMPLE SAMPLE SAMPLE
SAMPLE SAMPLE SAMPLE
SAMPLE SAMPLE SAMPLE

PROJECT: SAMPLE SAMPLE SAMPLE

LOCATION: SAMPLE SAMPLE SAMPLE

SCALE: 6" = 1'-0"

DATE: SAMPLE

DRAWN: SAMPLE

PAGE: 31 of 47

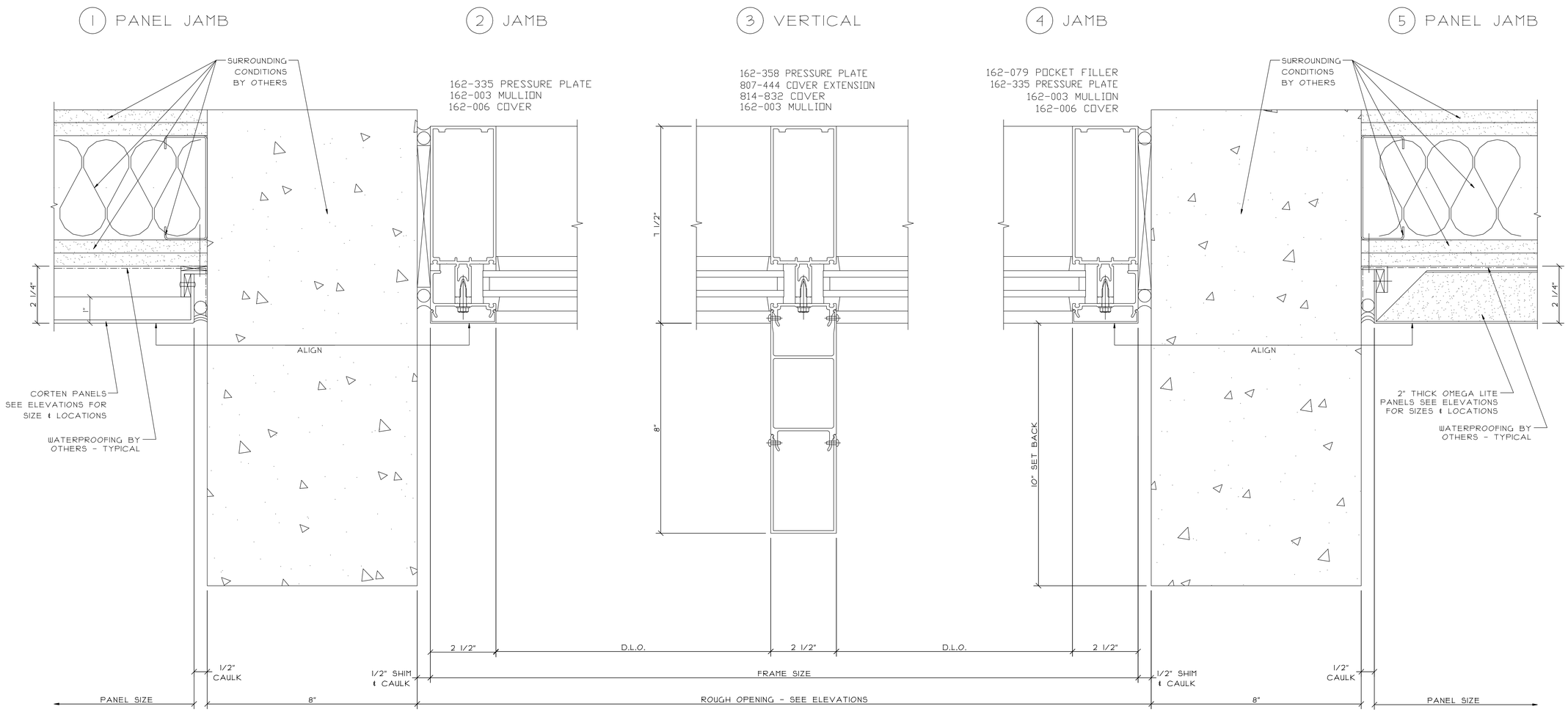

DATE:	REVISIONS:

GLAZING CONTRACTOR:
SAMPLE SAMPLE SAMPLE
SAMPLE SAMPLE SAMPLE
SAMPLE SAMPLE SAMPLE
SAMPLE SAMPLE SAMPLE
SAMPLE SAMPLE SAMPLE
SAMPLE SAMPLE SAMPLE

ARCHITECT:
SAMPLE SAMPLE SAMPLE
SAMPLE SAMPLE SAMPLE
SAMPLE SAMPLE SAMPLE
SAMPLE SAMPLE SAMPLE
SAMPLE SAMPLE SAMPLE
SAMPLE SAMPLE SAMPLE

PROJECT: SAMPLE SAMPLE SAMPLE

LOCATION: SAMPLE SAMPLE SAMPLE

SCALE: 6" = 1'-0"

DATE: SAMPLE

DRAWN: SAMPLE

PAGE: 32 of 47

1 JAMB

2 PANEL DETAIL BEHIND SIGN VERTICAL

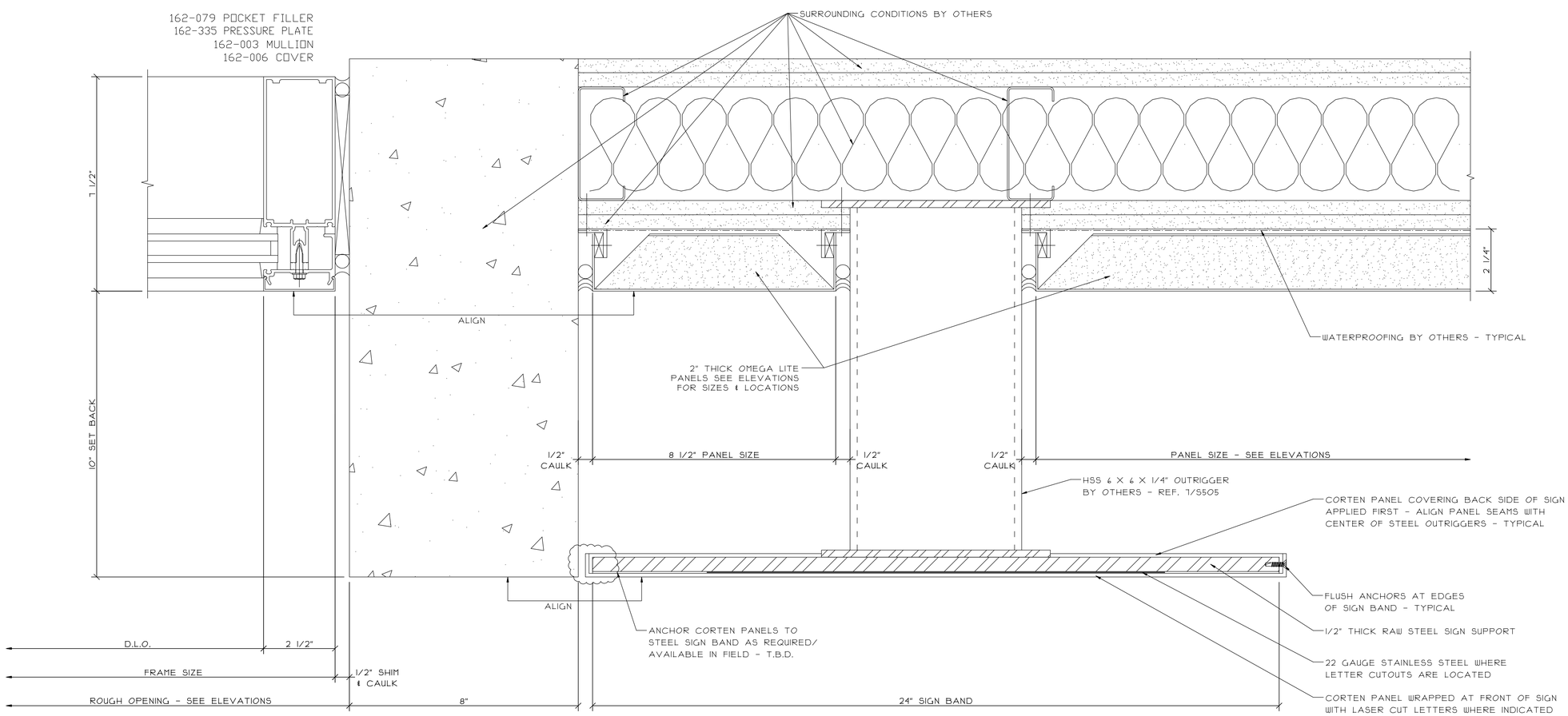

SEE SIGN LAYOUT FOR LASER CUT WORDS & LOCATIONS ON SHEET 15

DATE:	REVISIONS:

GLAZING CONTRACTOR:
SAMPLE SAMPLE SAMPLE
SAMPLE SAMPLE SAMPLE
SAMPLE SAMPLE SAMPLE
SAMPLE SAMPLE SAMPLE
SAMPLE SAMPLE SAMPLE
SAMPLE SAMPLE SAMPLE

ARCHITECT:
SAMPLE SAMPLE SAMPLE
SAMPLE SAMPLE SAMPLE
SAMPLE SAMPLE SAMPLE
SAMPLE SAMPLE SAMPLE
SAMPLE SAMPLE SAMPLE
SAMPLE SAMPLE SAMPLE

PROJECT: SAMPLE SAMPLE SAMPLE

LOCATION: SAMPLE SAMPLE SAMPLE

SCALE: 6" = 1'-0"

DATE: SAMPLE

DRAWN: SAMPLE

PAGE: 33 of 47

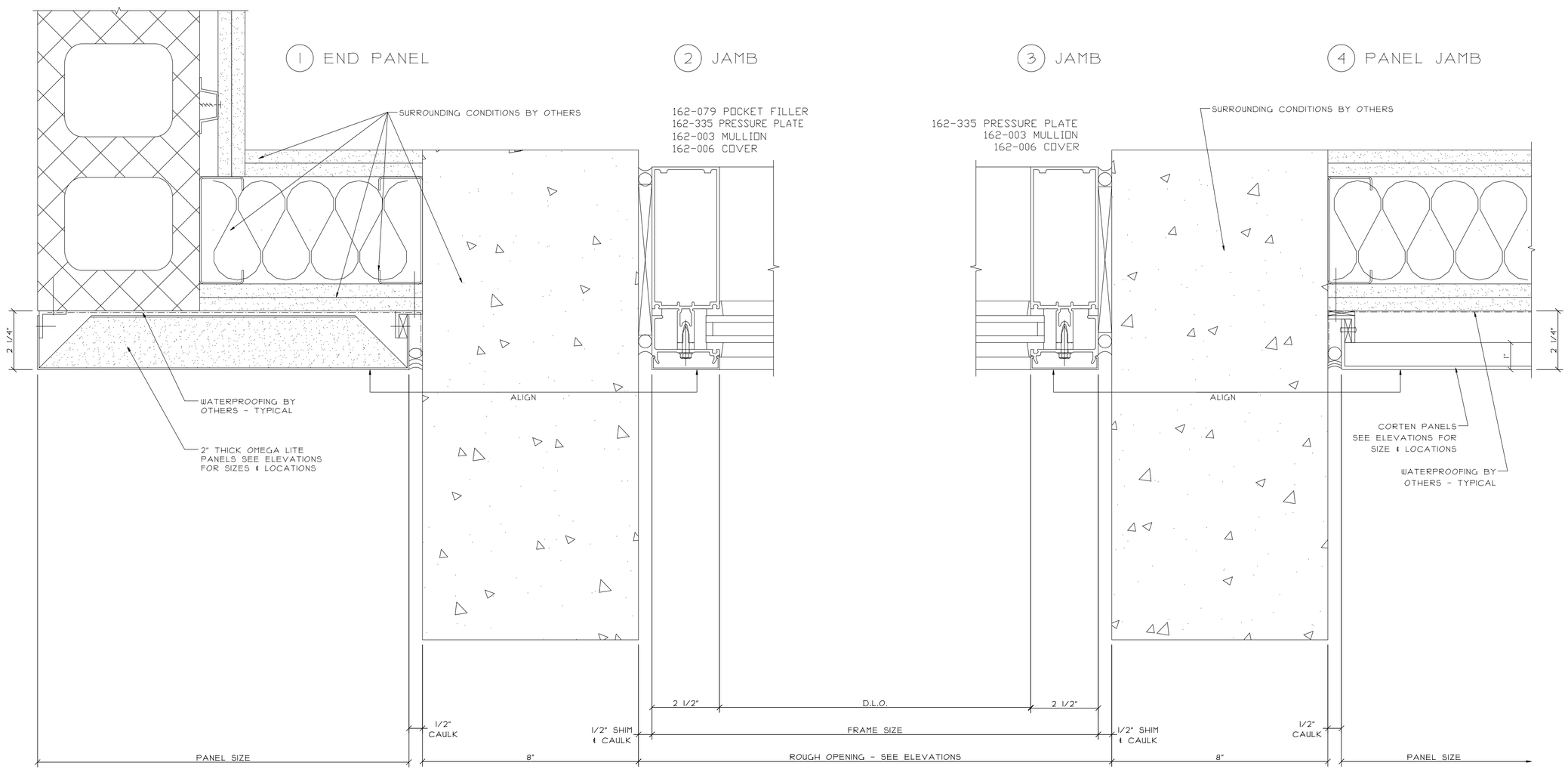

DATE:	REVISIONS:

GLAZING CONTRACTOR:
SAMPLE SAMPLE SAMPLE
SAMPLE SAMPLE SAMPLE
SAMPLE SAMPLE SAMPLE
SAMPLE SAMPLE SAMPLE
SAMPLE SAMPLE SAMPLE
SAMPLE SAMPLE SAMPLE

ARCHITECT:
SAMPLE SAMPLE SAMPLE
SAMPLE SAMPLE SAMPLE
SAMPLE SAMPLE SAMPLE
SAMPLE SAMPLE SAMPLE
SAMPLE SAMPLE SAMPLE

PROJECT: SAMPLE SAMPLE SAMPLE

LOCATION: SAMPLE SAMPLE SAMPLE

SCALE: 6" = 1'-0"

DATE: SAMPLE

DRAWN: SAMPLE

PAGE: 34 of 47

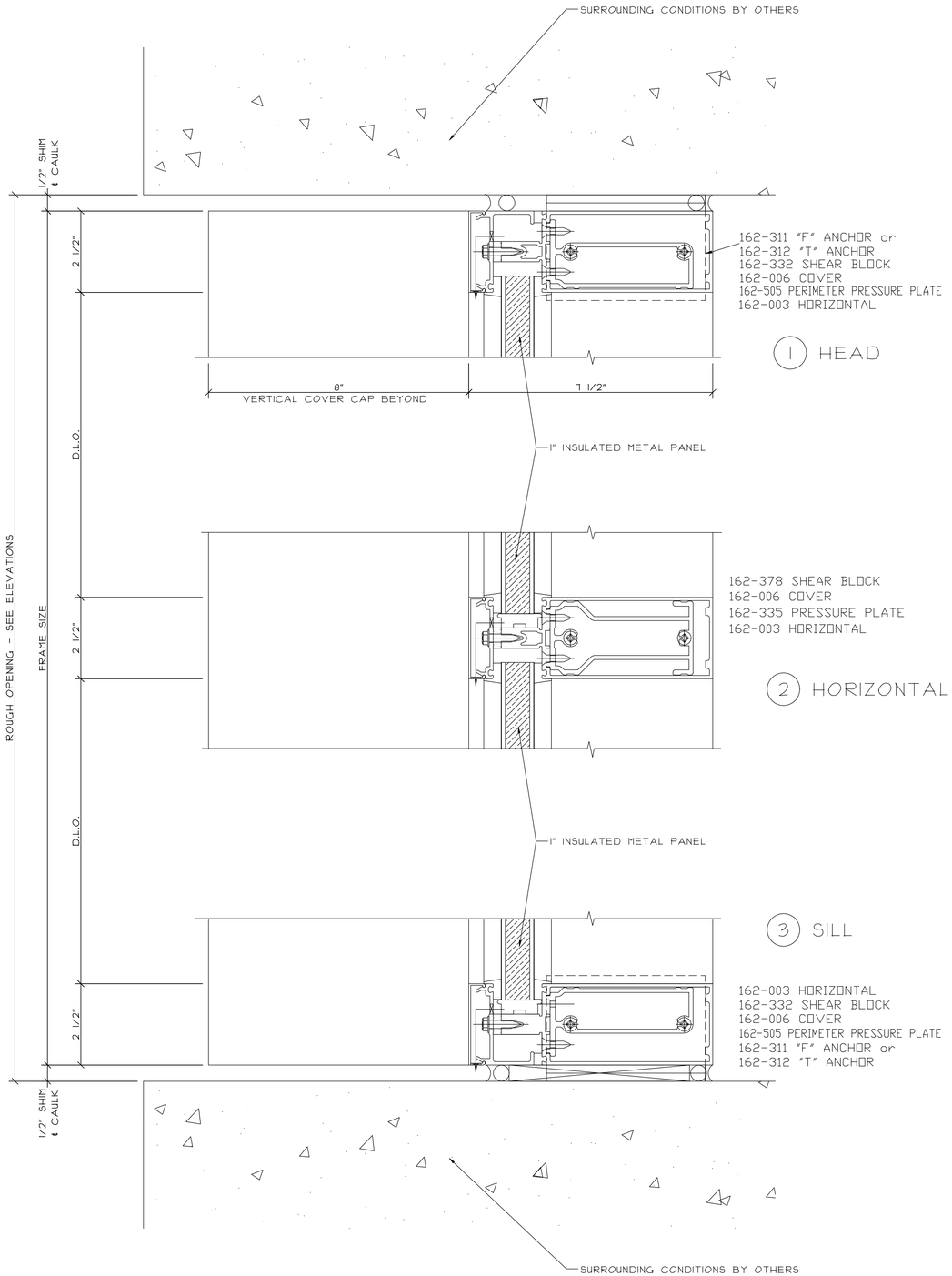

4 F ANCHOR DETAIL
(HEAD SHOWN SILL SIMILAR)

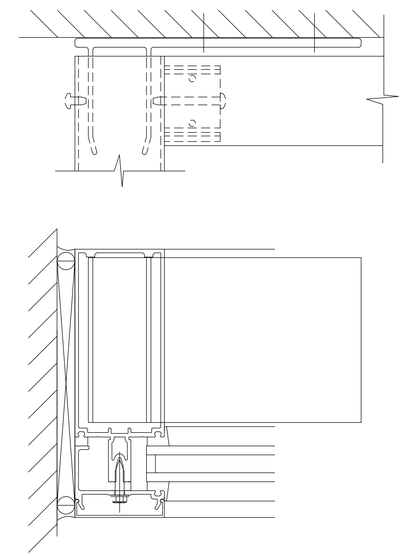

5 T ANCHOR DETAIL
(HEAD SHOWN SILL SIMILAR)

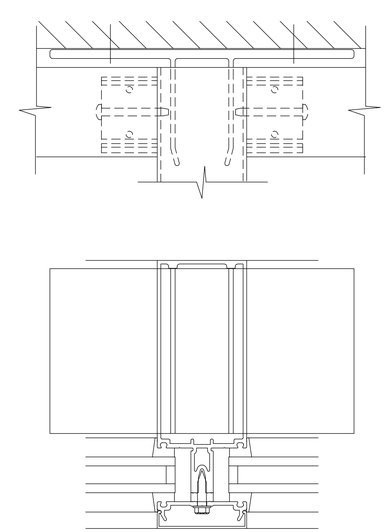

REVISIONS:	DATE:

GLAZING CONTRACTOR:
SAMPLE SAMPLE SAMPLE
SAMPLE SAMPLE SAMPLE
SAMPLE SAMPLE SAMPLE
SAMPLE SAMPLE SAMPLE
SAMPLE SAMPLE SAMPLE
SAMPLE SAMPLE SAMPLE

ARCHITECT:
SAMPLE SAMPLE SAMPLE
SAMPLE SAMPLE SAMPLE
SAMPLE SAMPLE SAMPLE
SAMPLE SAMPLE SAMPLE
SAMPLE SAMPLE SAMPLE
SAMPLE SAMPLE SAMPLE

PROJECT: SAMPLE SAMPLE SAMPLE

LOCATION: SAMPLE SAMPLE SAMPLE

SCALE: 6" = 1'-0"

DATE: SAMPLE

DRAWN: SAMPLE

PAGE: 35 of 47

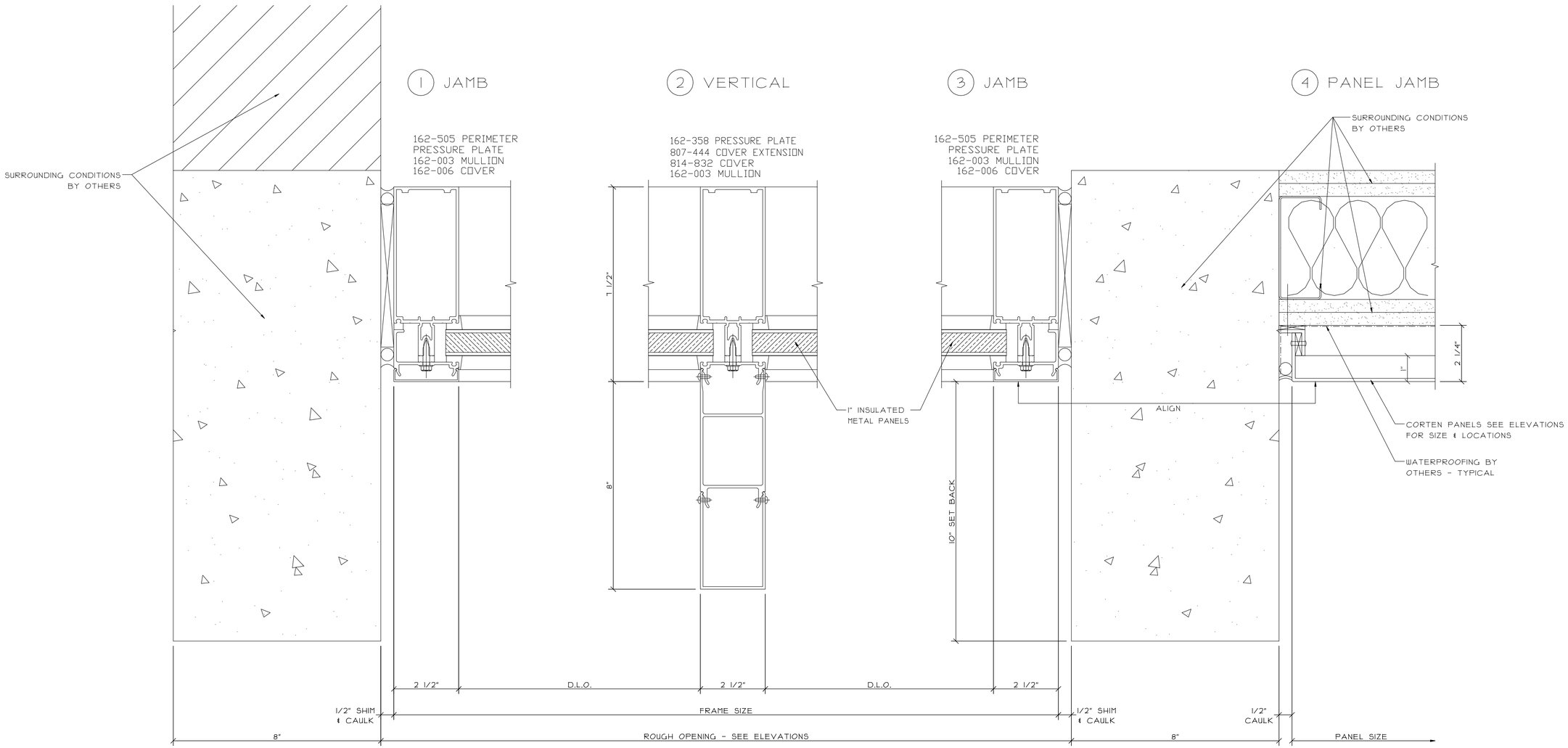

REVISIONS:	DATE:

GLAZING CONTRACTOR:
SAMPLE SAMPLE SAMPLE
SAMPLE SAMPLE SAMPLE
SAMPLE SAMPLE SAMPLE
SAMPLE SAMPLE SAMPLE
SAMPLE SAMPLE SAMPLE

ARCHITECT:
SAMPLE SAMPLE SAMPLE
SAMPLE SAMPLE SAMPLE
SAMPLE SAMPLE SAMPLE
SAMPLE SAMPLE SAMPLE
SAMPLE SAMPLE SAMPLE

PROJECT: SAMPLE SAMPLE SAMPLE

LOCATION: SAMPLE SAMPLE SAMPLE

SCALE: 6" = 1'-0"

DATE: SAMPLE

DRAWN: SAMPLE

PAGE: 36 of 47

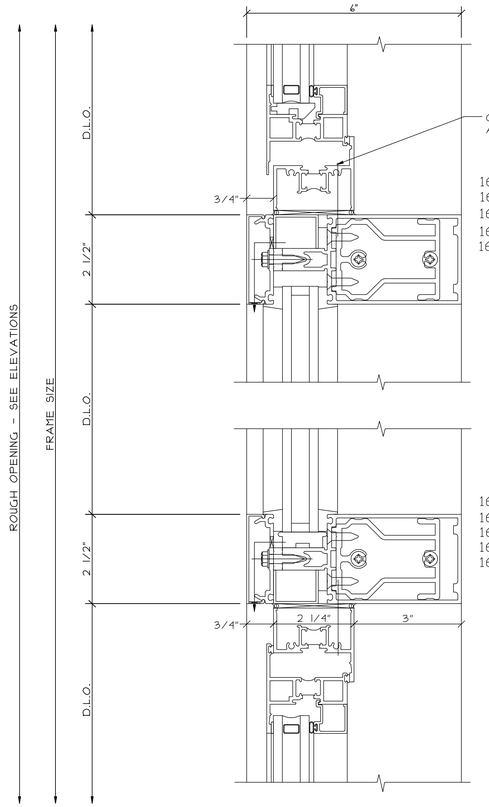

1 HORIZONTAL

2 HORIZONTAL

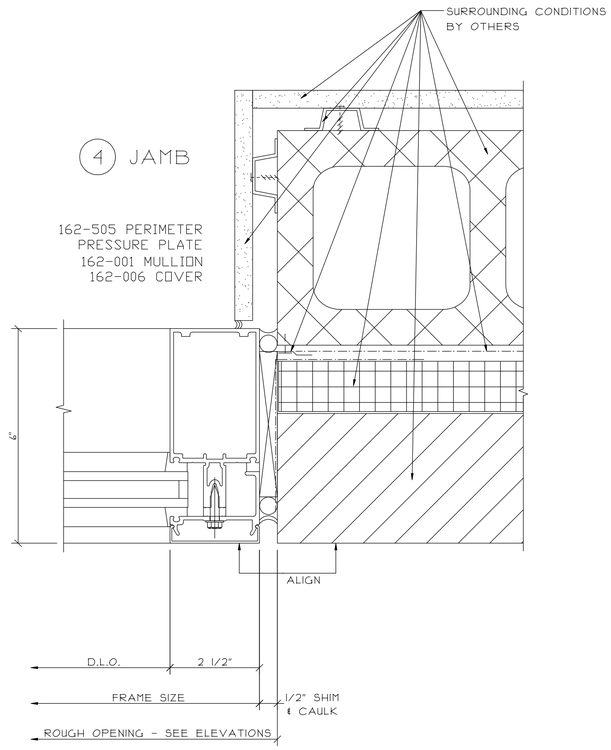

4 JAMB

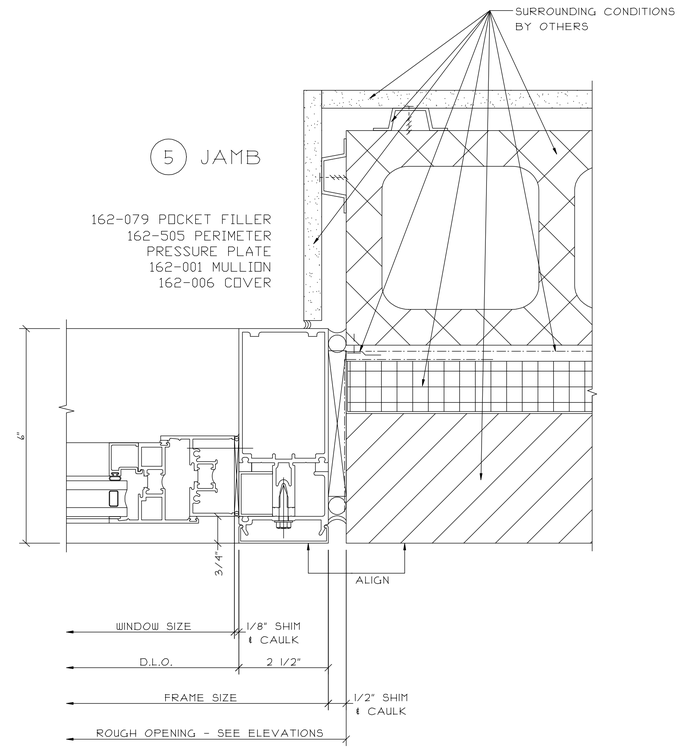

5 JAMB

3 VERTICAL W/ WINDOWS

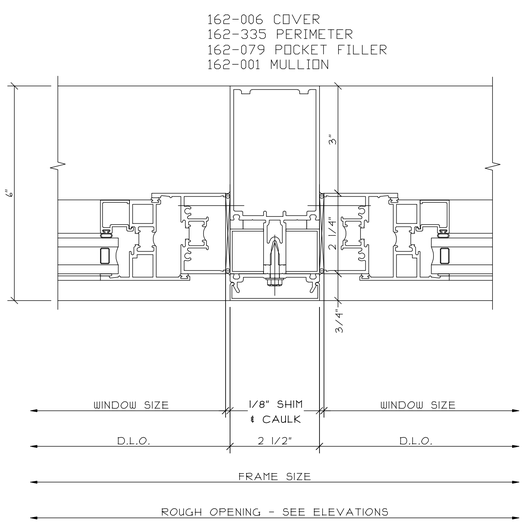

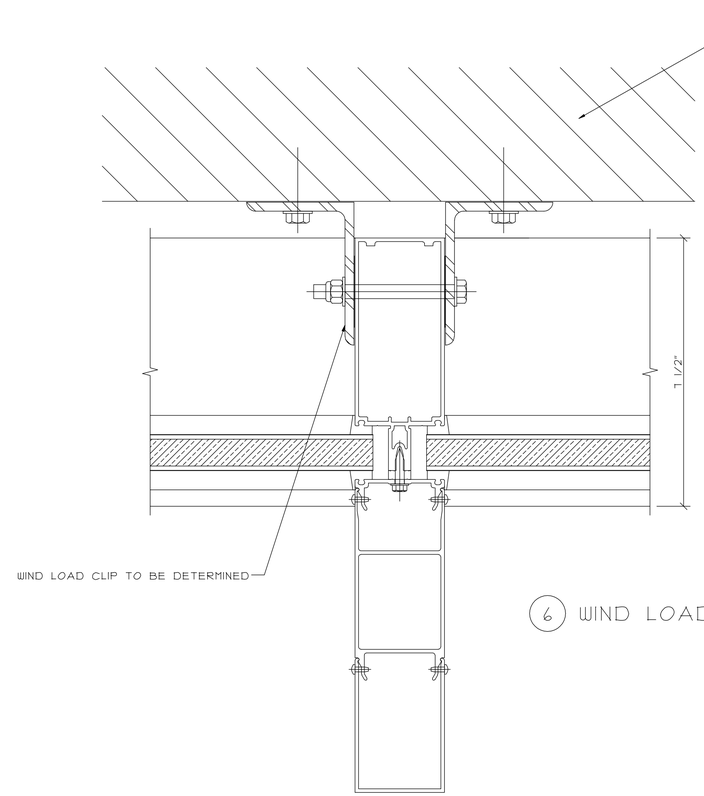

6 WIND LOAD CLIP

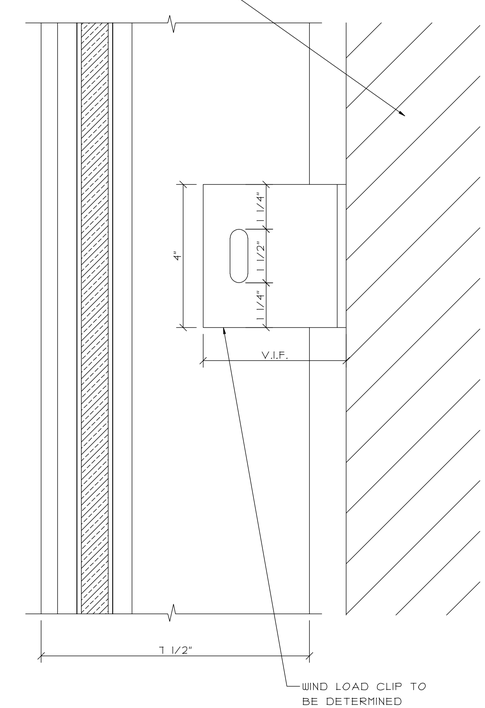

DATE:	REVISIONS:

GLAZING CONTRACTOR: SAMPLE SAMPLE SAMPLE
SAMPLE SAMPLE SAMPLE
SAMPLE SAMPLE SAMPLE
SAMPLE SAMPLE SAMPLE
SAMPLE SAMPLE SAMPLE
SAMPLE SAMPLE SAMPLE

ARCHITECT: SAMPLE SAMPLE SAMPLE
SAMPLE SAMPLE SAMPLE
SAMPLE SAMPLE SAMPLE
SAMPLE SAMPLE SAMPLE
SAMPLE SAMPLE SAMPLE
SAMPLE SAMPLE SAMPLE

PROJECT: SAMPLE SAMPLE SAMPLE

LOCATION: SAMPLE SAMPLE SAMPLE

SCALE: 6" = 1'-0"

DATE: SAMPLE

DRAWN: SAMPLE

PAGE: 36A of 47

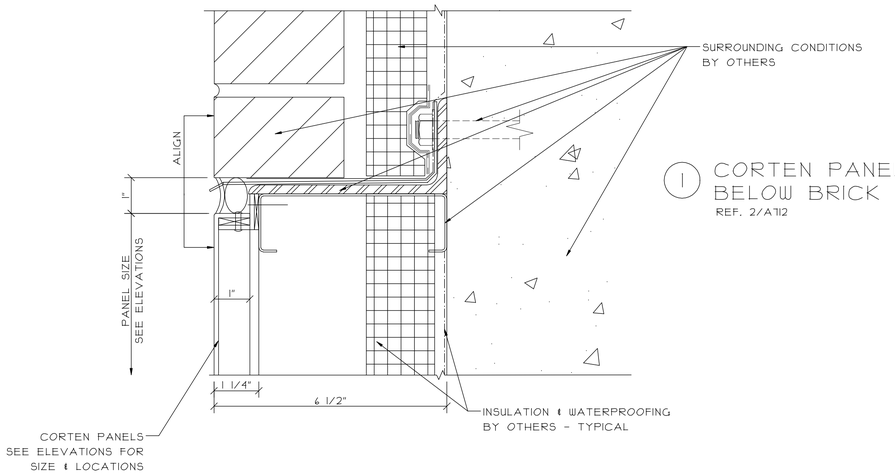

1 CORTEN PANEL BELOW BRICK DETAIL
REF. 2/A712

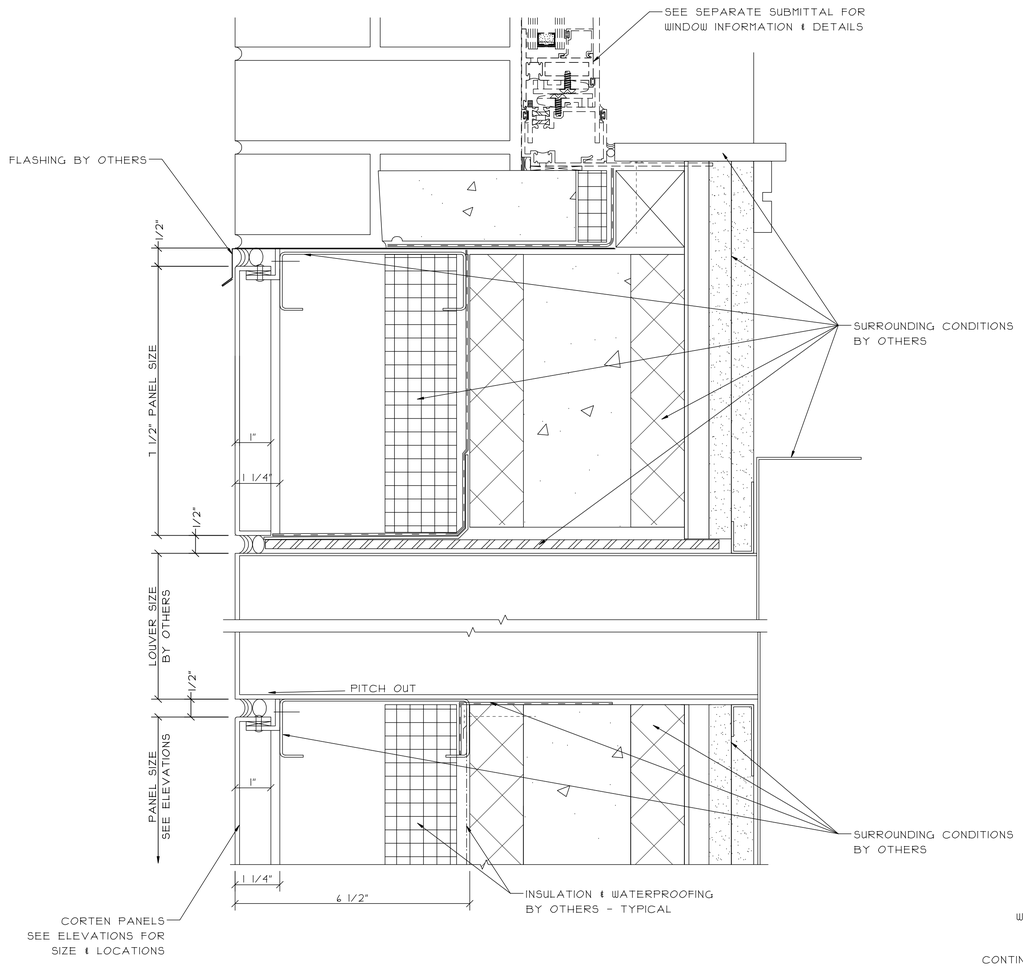

2 CORTEN PANELS BELOW WINDOW DETAIL
REF. 1/A712

3 TYPICAL HORIZONTAL JOINT AT BLOCK WALLS

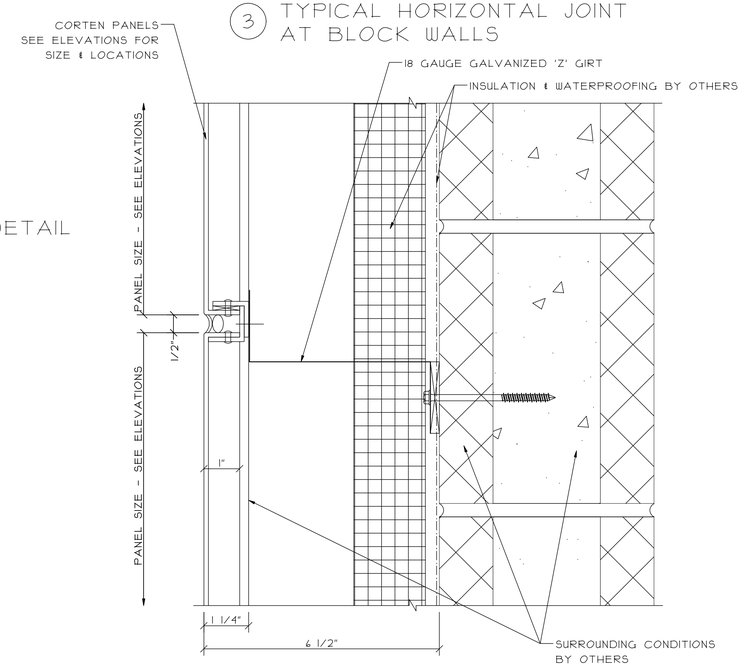

4 TYPICAL HORIZONTAL JOINT AT DRYWALL & STUDS

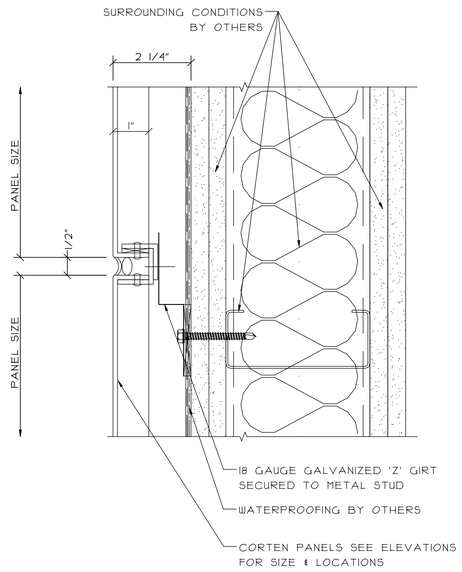

5 TYPICAL VERTICAL JOINT AT BLOCK WALLS

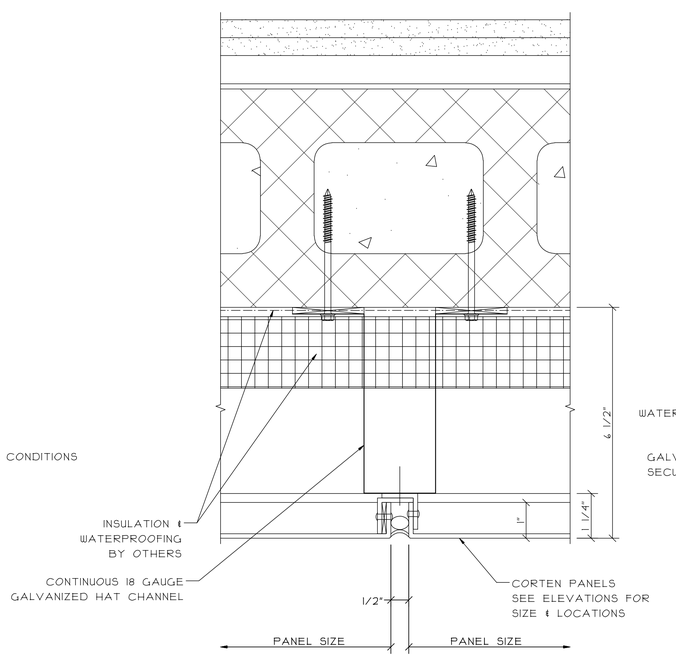

6 TYPICAL VERTICAL JOINT AT DRYWALL & STUDS

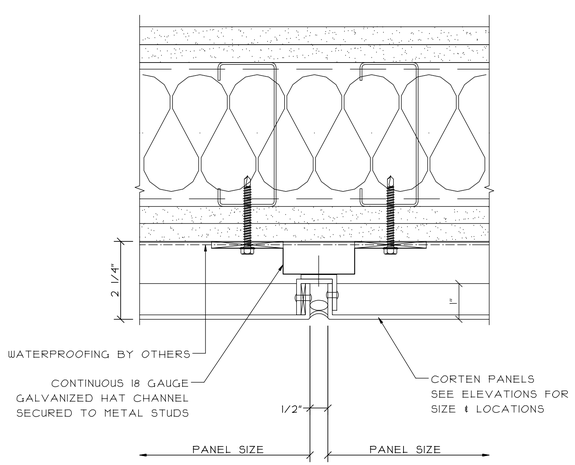

DATE:	
REVISIONS:	
GLAZING CONTRACTOR:	SAMPLE SAMPLE SAMPLE SAMPLE SAMPLE SAMPLE SAMPLE SAMPLE SAMPLE SAMPLE SAMPLE SAMPLE SAMPLE SAMPLE SAMPLE SAMPLE SAMPLE SAMPLE
ARCHITECT:	SAMPLE SAMPLE SAMPLE SAMPLE SAMPLE SAMPLE SAMPLE SAMPLE SAMPLE SAMPLE SAMPLE SAMPLE SAMPLE SAMPLE SAMPLE SAMPLE SAMPLE SAMPLE
PROJECT:	SAMPLE SAMPLE SAMPLE
LOCATION:	SAMPLE SAMPLE SAMPLE
SCALE:	6" = 1'-0"
DATE:	SAMPLE
DRAWN:	SAMPLE
PAGE:	37 of 47

1 2" OMEGA LITE PANEL BELOW BRICK DETAIL

REF. 2/A712 (SIM.)

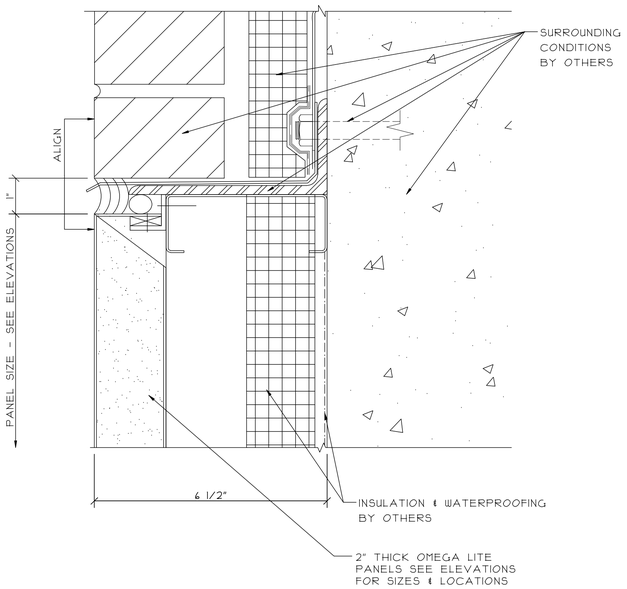

2 TYPICAL VERTICAL JOINT AT BLOCK WALLS

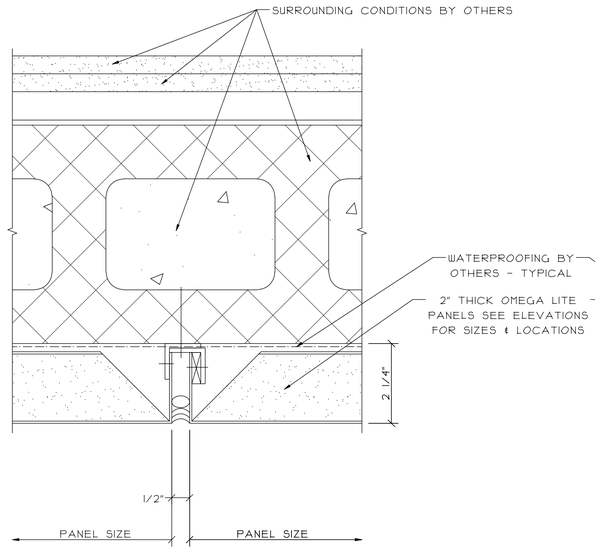

3 TYPICAL VERTICAL JOINT AT DRYWALL & STUDS

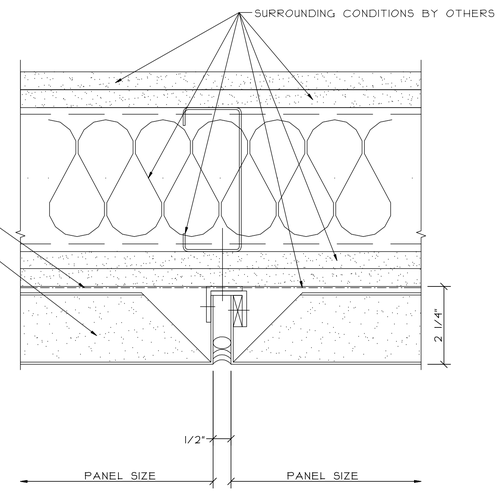

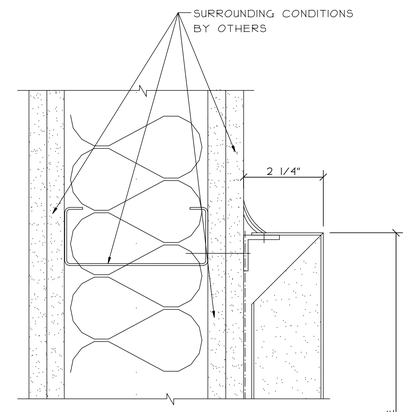

5A 2" OMEGA LITE PANEL TERMINATION

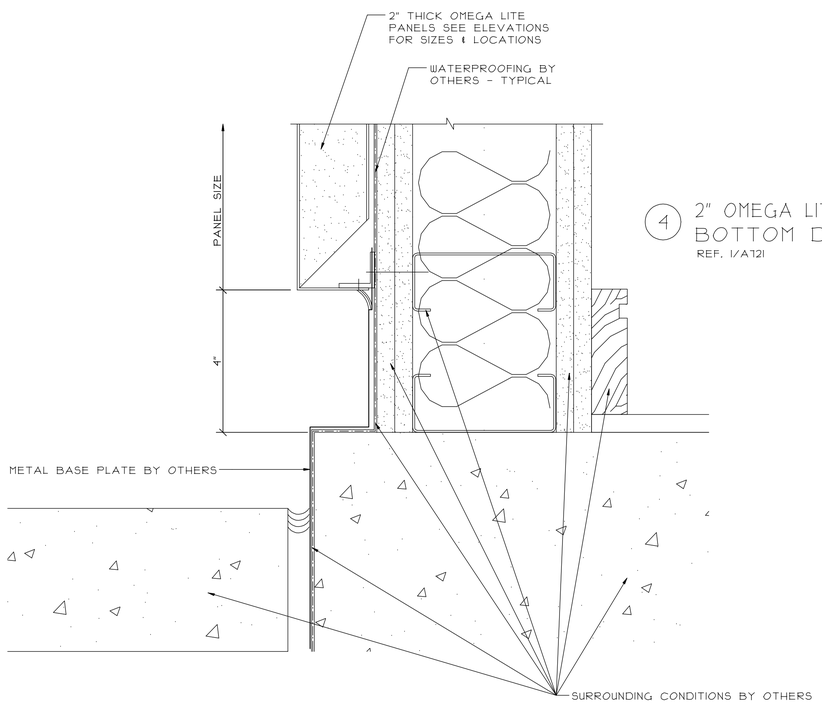

4 2" OMEGA LITE PANELS BOTTOM DETAIL

REF. 1/A721

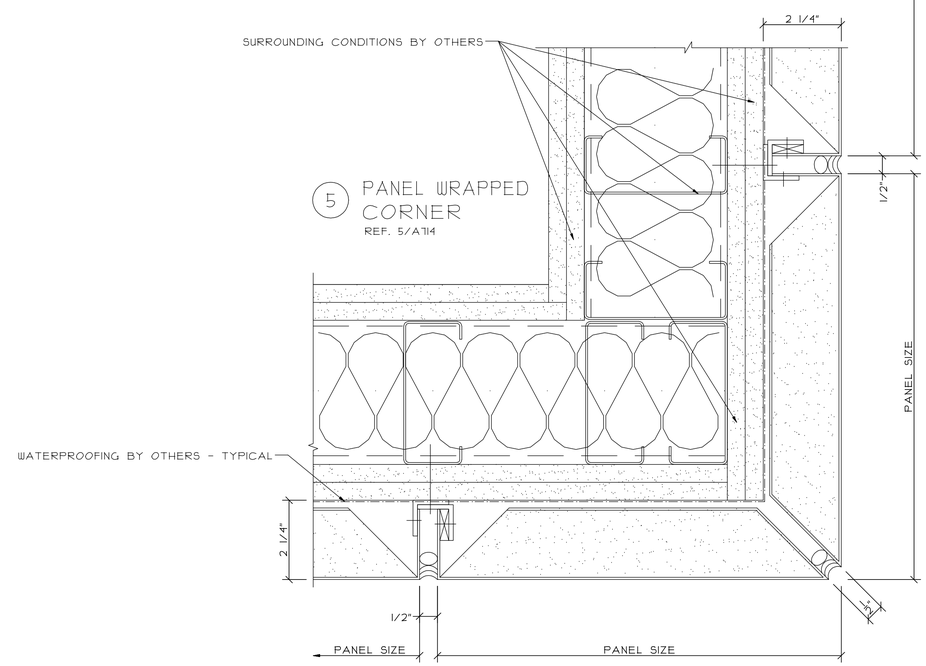

5 PANEL WRAPPED CORNER

REF. 5/A714

DATE:	REVISIONS:

GLAZING CONTRACTOR:
SAMPLE SAMPLE SAMPLE
SAMPLE SAMPLE SAMPLE
SAMPLE SAMPLE SAMPLE
SAMPLE SAMPLE SAMPLE
SAMPLE SAMPLE SAMPLE
SAMPLE SAMPLE SAMPLE

ARCHITECT:
SAMPLE SAMPLE SAMPLE
SAMPLE SAMPLE SAMPLE
SAMPLE SAMPLE SAMPLE
SAMPLE SAMPLE SAMPLE
SAMPLE SAMPLE SAMPLE

PROJECT: SAMPLE SAMPLE SAMPLE

LOCATION: SAMPLE SAMPLE SAMPLE

SCALE: 6" = 1'-0"

DATE: SAMPLE

DRAWN: SAMPLE

PAGE: 38 of 47

1 PANEL JAMB
REF. 1/A713

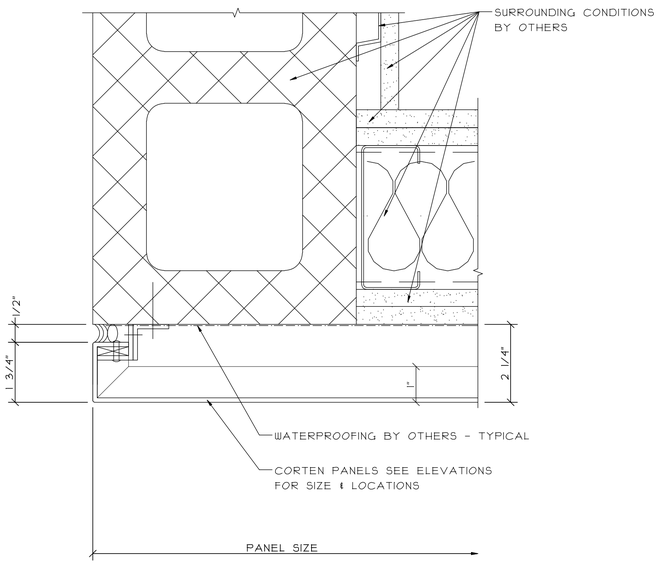

2 PANEL JAMB AT EXISTING BUILDING
REF. 3/A713

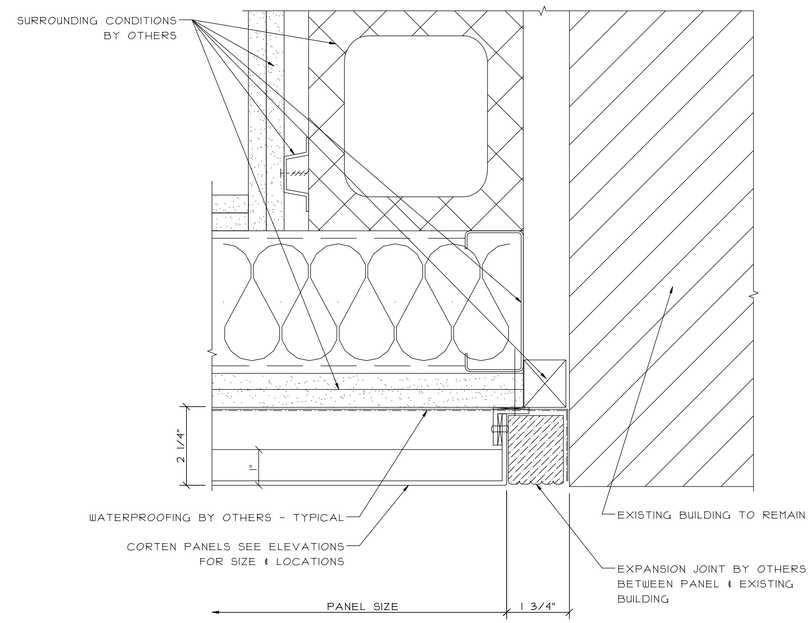

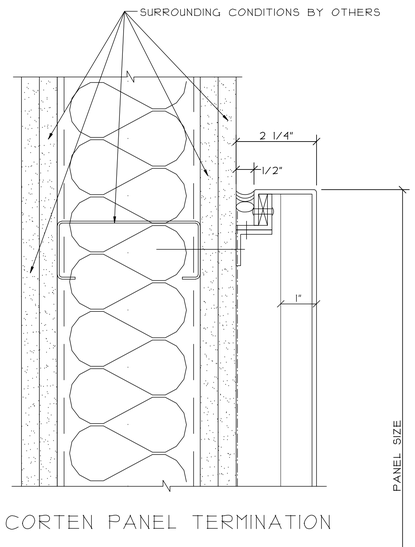

4A CORTEN PANEL TERMINATION

4 CORTEN PANEL WRAPPED CORNER
REF. 6/A713

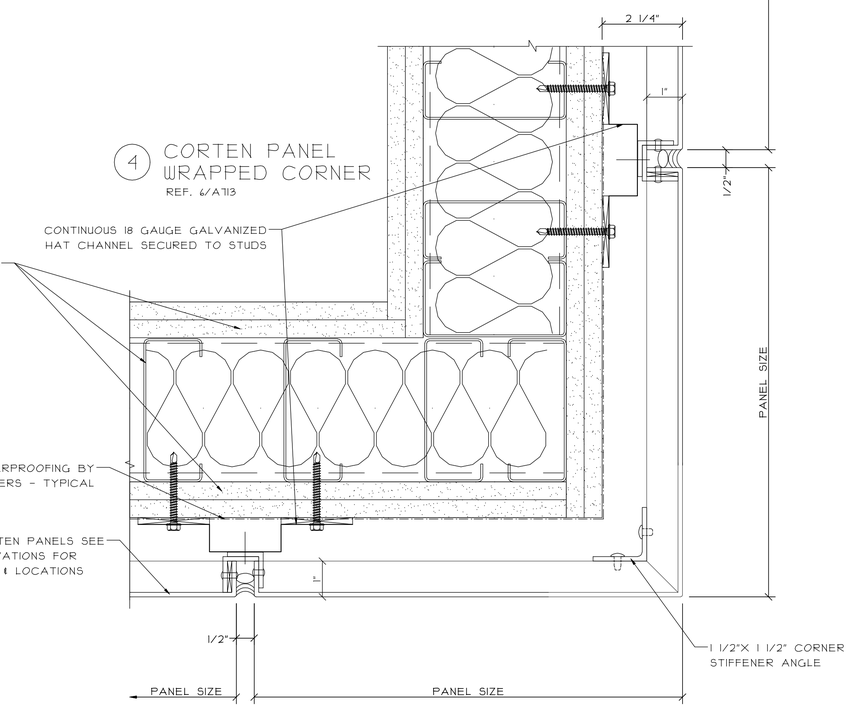

3 PANEL CHANGE DETAIL
REF. 4/A712

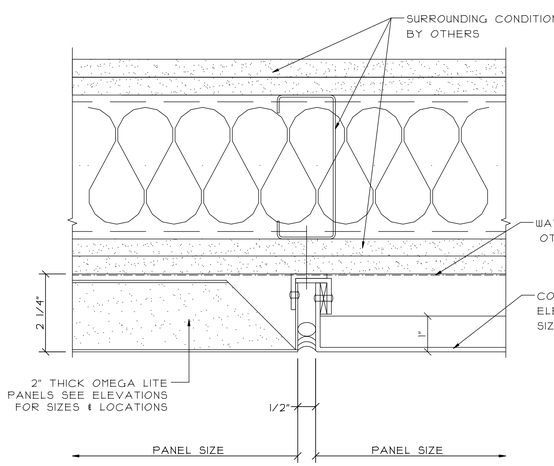

5 CORTEN PANELS BOTTOM PANELS
REF. 2/A721

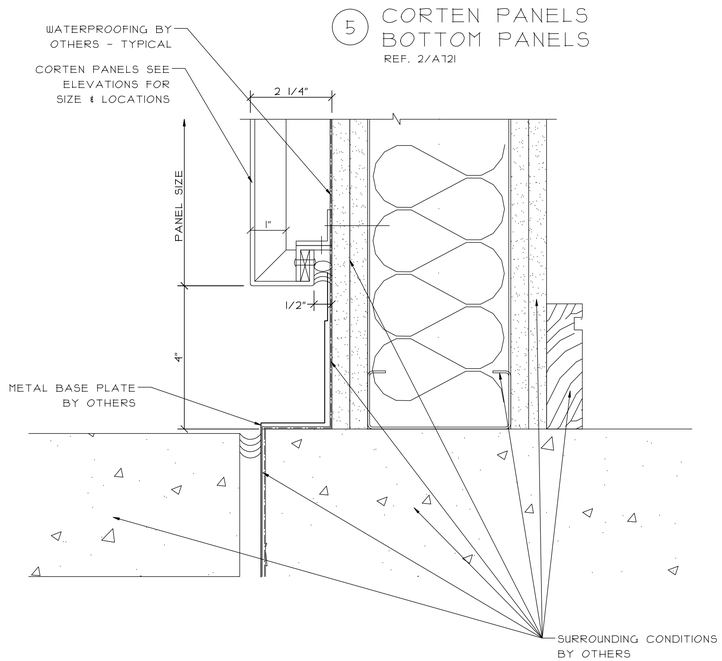

DATE:	REVISIONS:

GLAZING CONTRACTOR: SAMPLE SAMPLE SAMPLE
SAMPLE SAMPLE SAMPLE
SAMPLE SAMPLE SAMPLE
SAMPLE SAMPLE SAMPLE
SAMPLE SAMPLE SAMPLE

ARCHITECT: SAMPLE SAMPLE SAMPLE
SAMPLE SAMPLE SAMPLE
SAMPLE SAMPLE SAMPLE
SAMPLE SAMPLE SAMPLE
SAMPLE SAMPLE SAMPLE

PROJECT: SAMPLE SAMPLE SAMPLE

LOCATION: SAMPLE SAMPLE SAMPLE

SCALE: 6" = 1'-0"

DATE: SAMPLE

DRAWN: SAMPLE

PAGE: 39 of 47

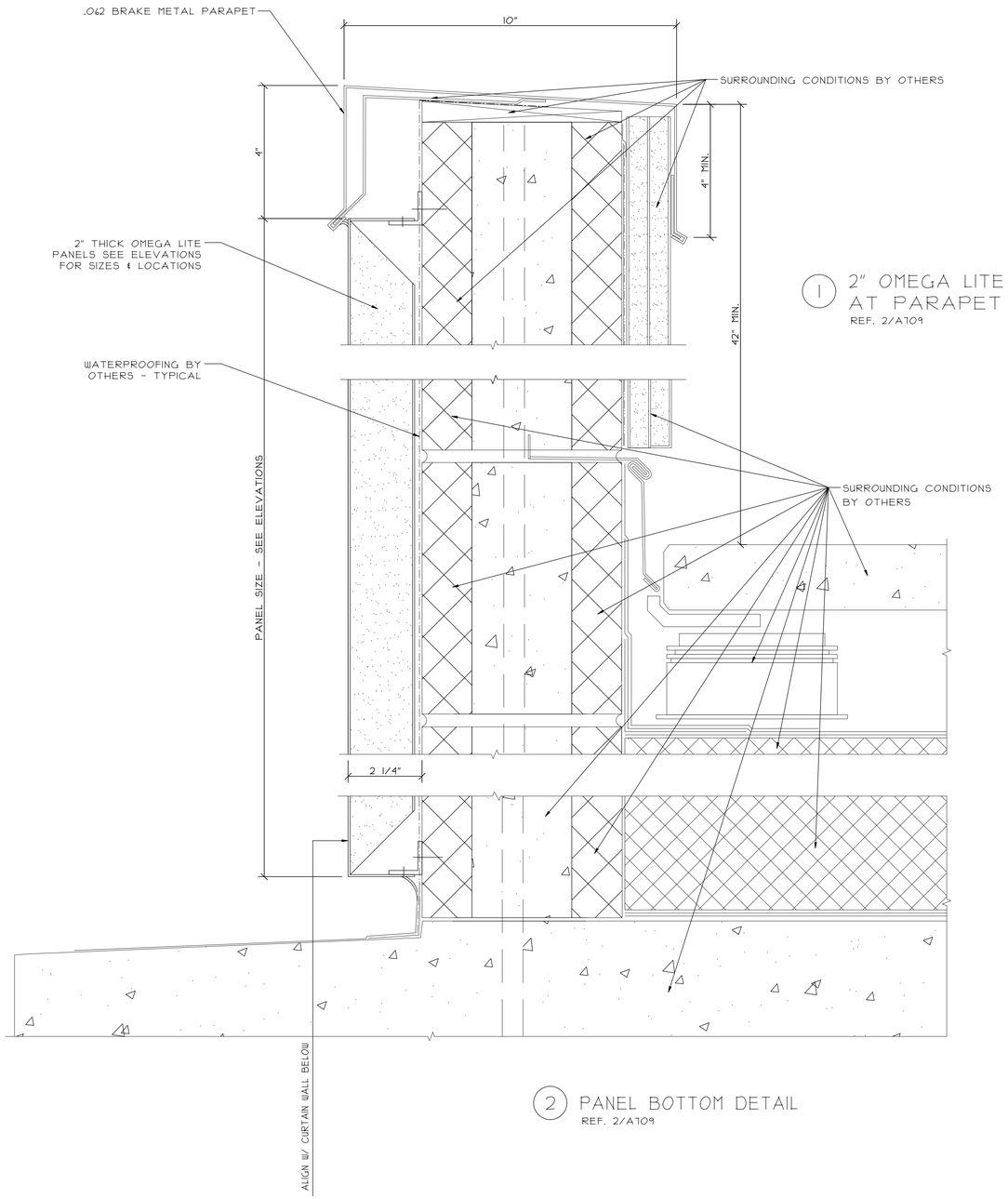

1 2" OMEGA LITE PANELS AT PARAPET
REF. 2/A709

2 PANEL BOTTOM DETAIL
REF. 2/A709

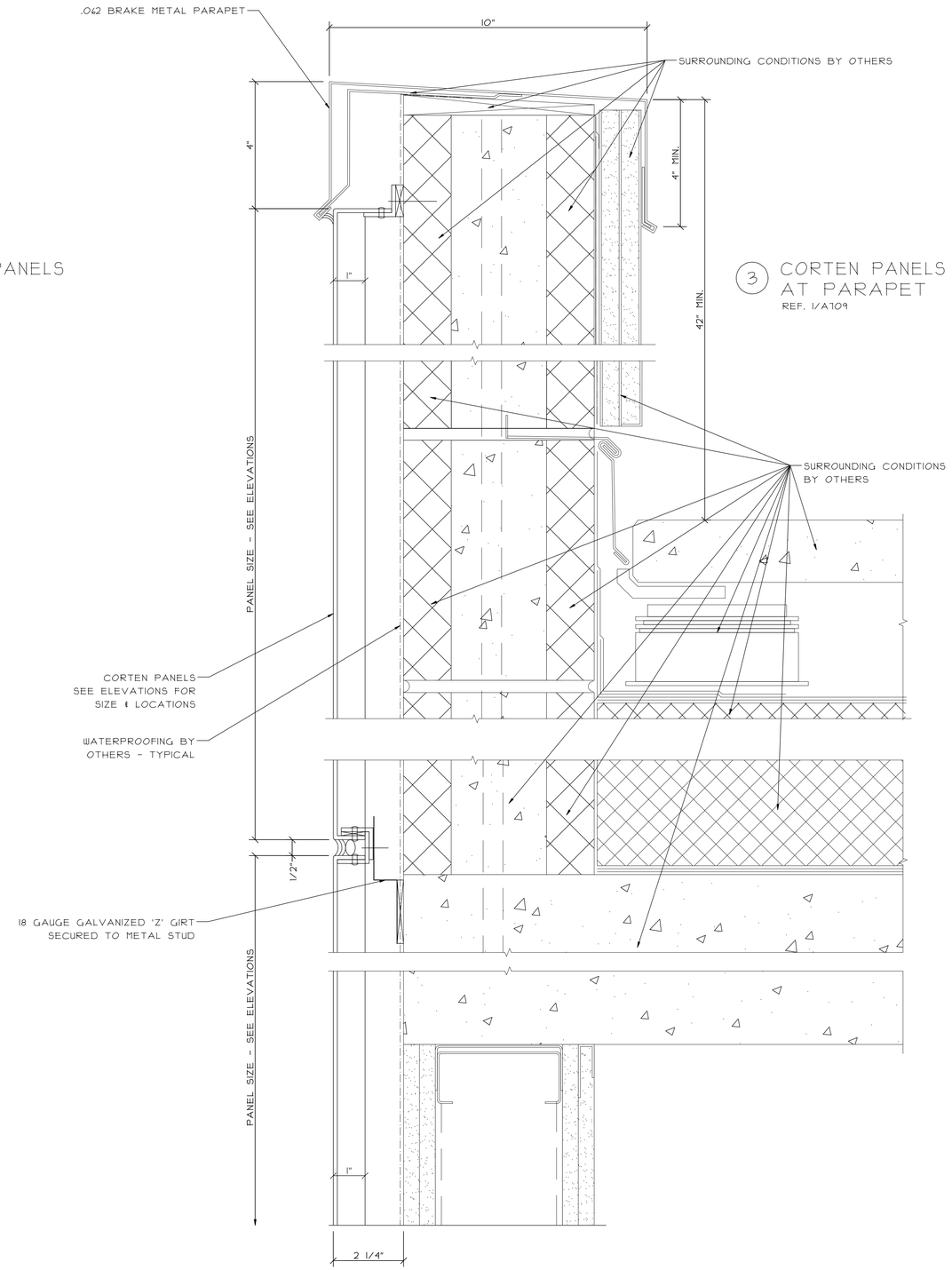

3 CORTEN PANELS AT PARAPET
REF. 1/A709

PROJECT:	SAMPLE SAMPLE SAMPLE
LOCATION:	SAMPLE SAMPLE SAMPLE
ARCHITECT:	SAMPLE SAMPLE SAMPLE SAMPLE SAMPLE SAMPLE SAMPLE SAMPLE SAMPLE SAMPLE SAMPLE SAMPLE SAMPLE SAMPLE SAMPLE
GLAZING CONTRACTOR:	SAMPLE SAMPLE SAMPLE SAMPLE SAMPLE SAMPLE SAMPLE SAMPLE SAMPLE SAMPLE SAMPLE SAMPLE SAMPLE SAMPLE SAMPLE
REVISIONS:	
DATE:	

SCALE: 6" = 1'-0"

DATE: SAMPLE

DRAWN: SAMPLE

PAGE: 40 of 47

SEE SIGN LAYOUT FOR LASER CUT WORDS & LOCATIONS ON SHEET 15

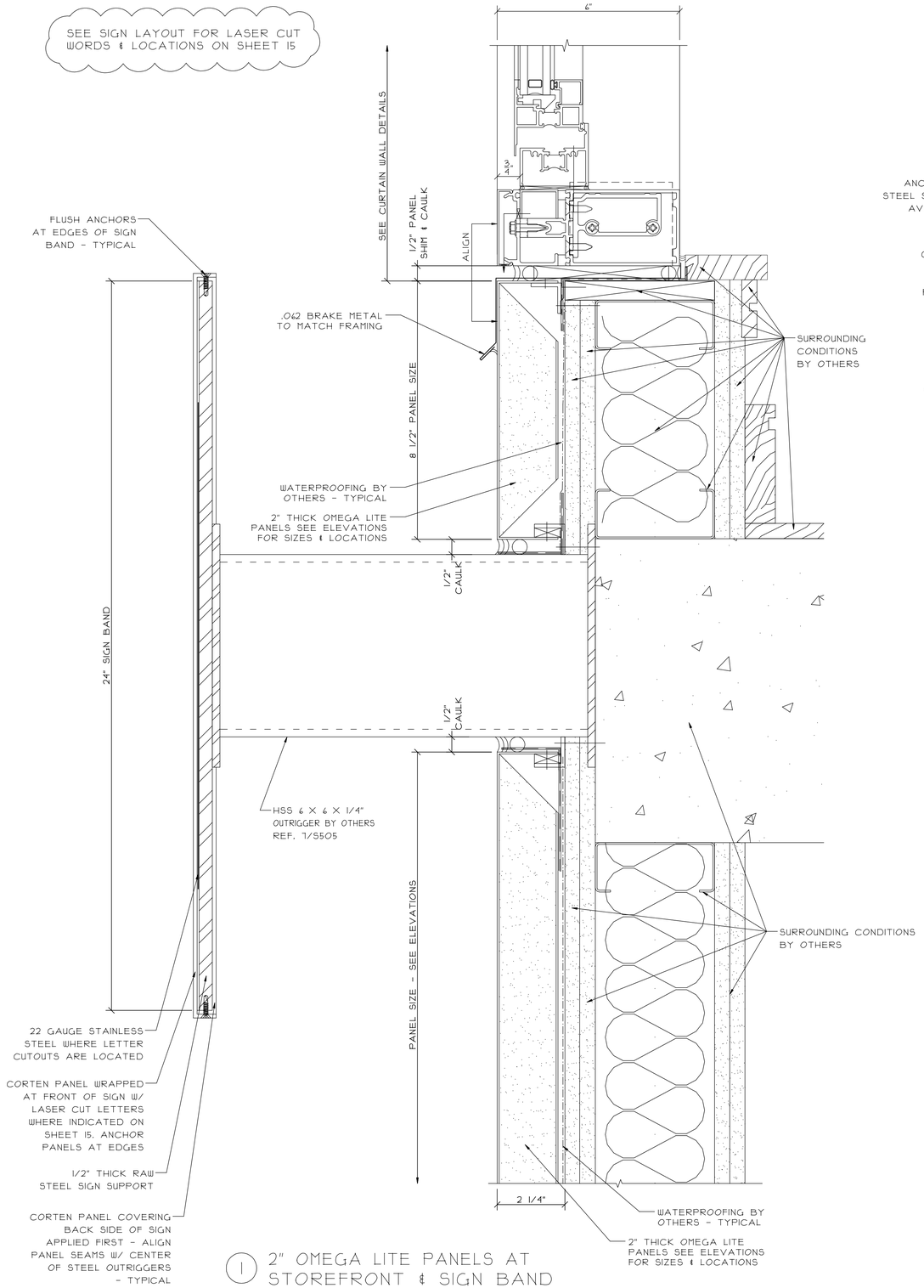

1 2" OMEGA LITE PANELS AT STOREFRONT & SIGN BAND

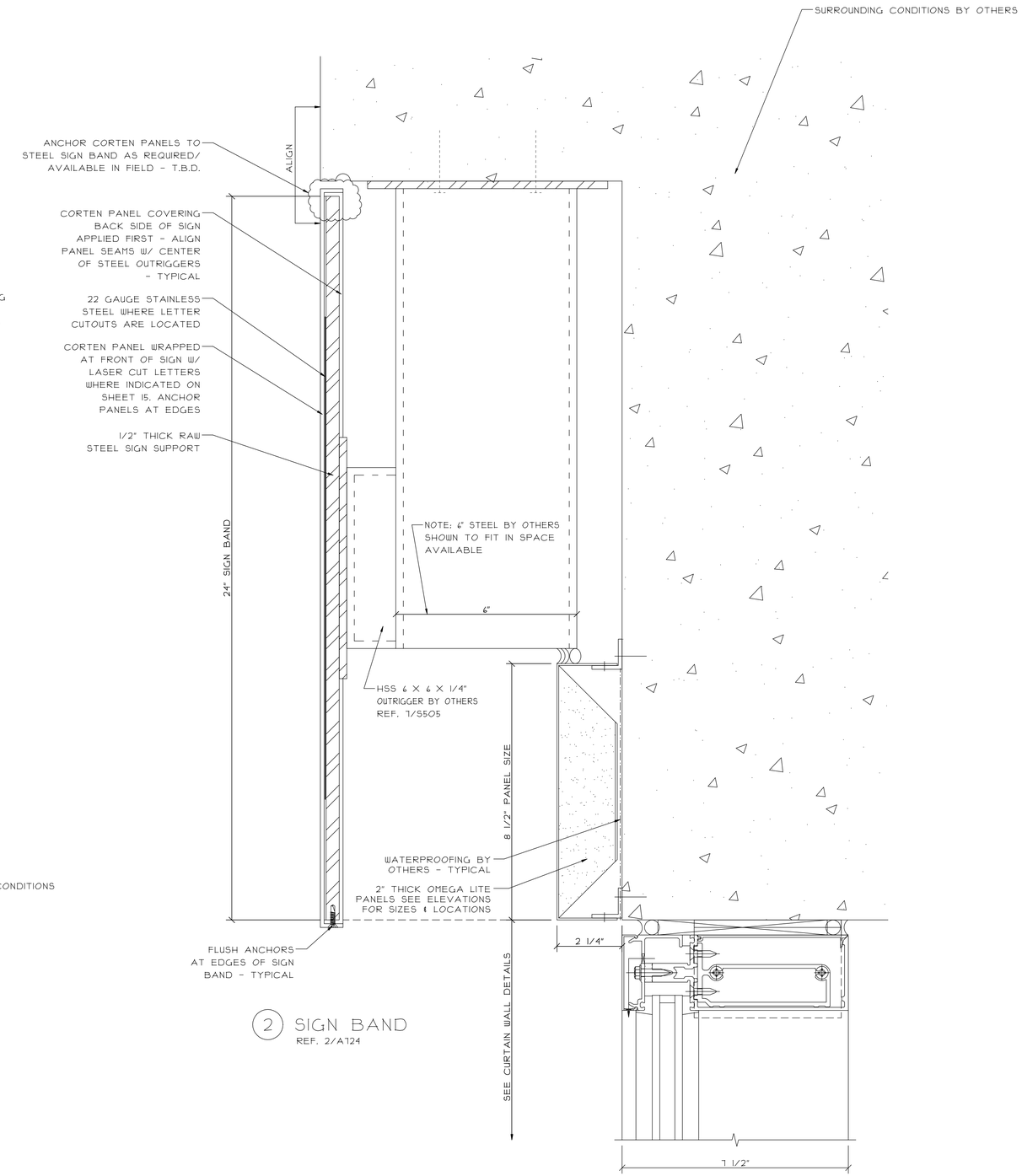

2 SIGN BAND
REF. 2/A124

REVISIONS:	DATE:

GLAZING CONTRACTOR:
SAMPLE SAMPLE SAMPLE
SAMPLE SAMPLE SAMPLE
SAMPLE SAMPLE SAMPLE
SAMPLE SAMPLE SAMPLE
SAMPLE SAMPLE SAMPLE
SAMPLE SAMPLE SAMPLE

ARCHITECT:
SAMPLE SAMPLE SAMPLE
SAMPLE SAMPLE SAMPLE
SAMPLE SAMPLE SAMPLE
SAMPLE SAMPLE SAMPLE
SAMPLE SAMPLE SAMPLE
SAMPLE SAMPLE SAMPLE

PROJECT: SAMPLE SAMPLE SAMPLE

LOCATION: SAMPLE SAMPLE SAMPLE

SCALE: 6" = 1'-0"

DATE: SAMPLE

DRAWN: SAMPLE

PAGE: 41 of 47

SEE SIGN LAYOUT FOR LASER CUT WORDS & LOCATIONS ON SHEET 15

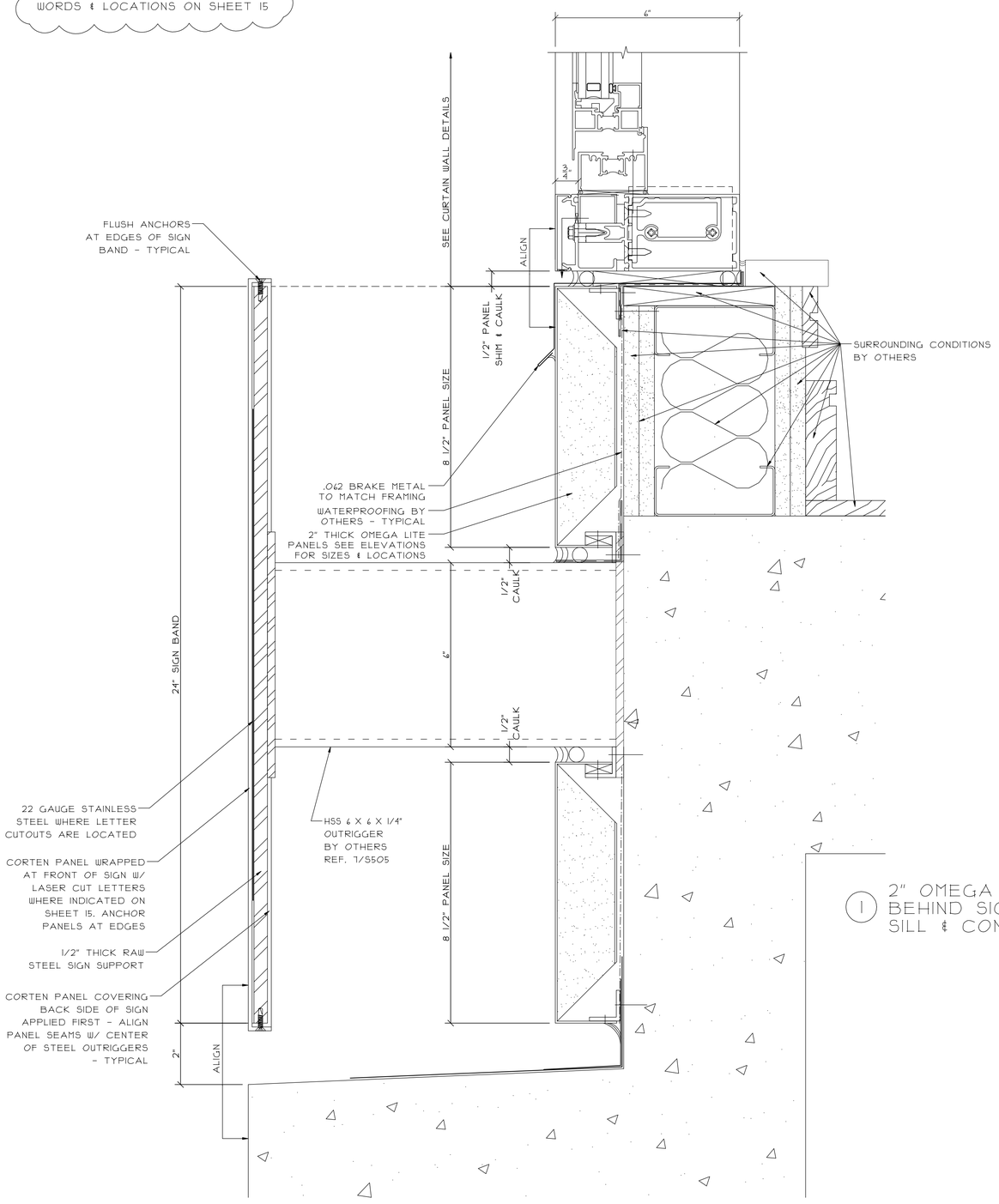

1 2" OMEGA LITE PANELS BEHIND SIGN @ WINDOW SILL & CONCRETE

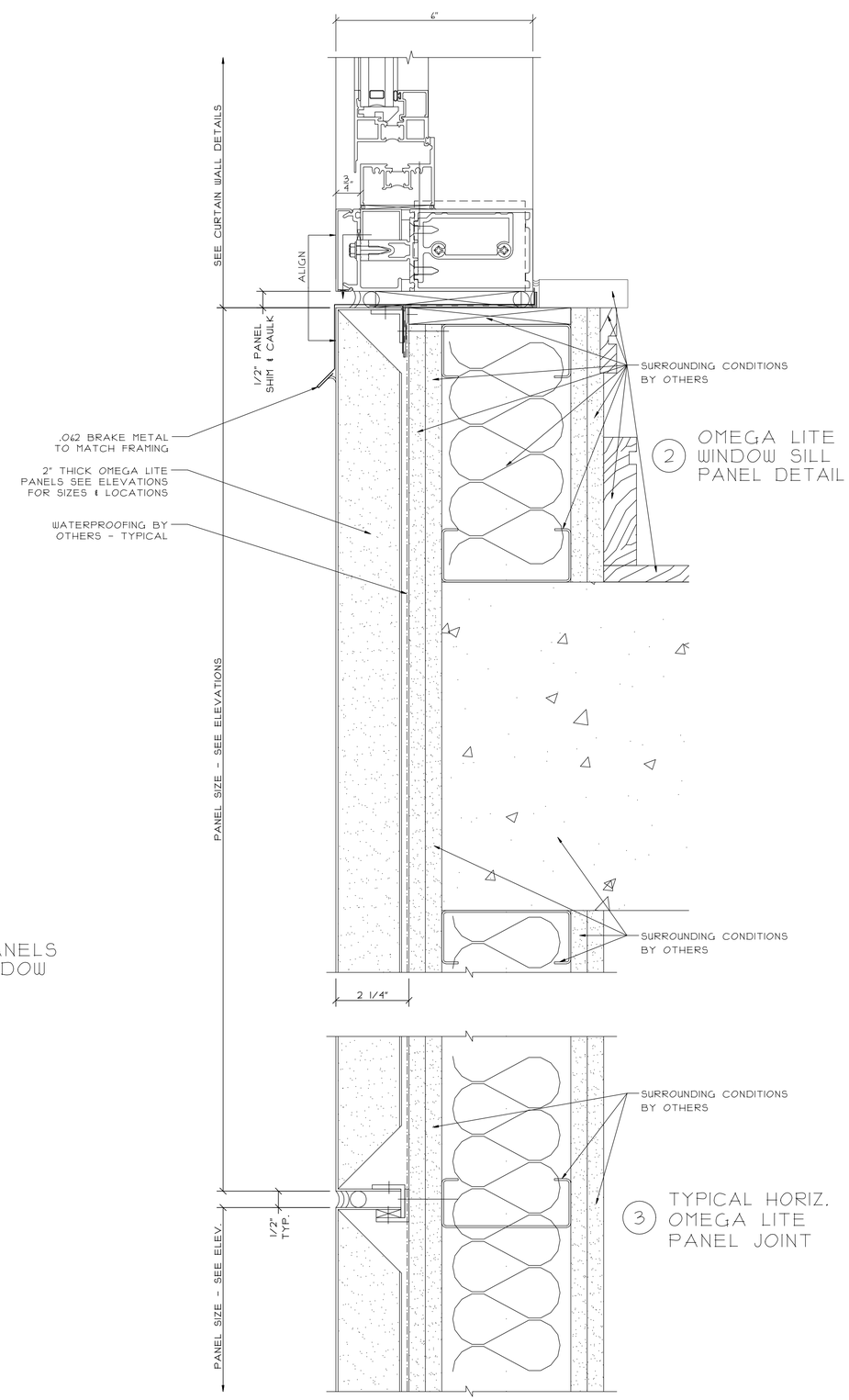

2 OMEGA LITE WINDOW SILL PANEL DETAIL

3 TYPICAL HORIZ. OMEGA LITE PANEL JOINT

DATE:	REVISIONS:

GLAZING CONTRACTOR: SAMPLE SAMPLE SAMPLE
SAMPLE SAMPLE SAMPLE
SAMPLE SAMPLE SAMPLE
SAMPLE SAMPLE SAMPLE
SAMPLE SAMPLE SAMPLE

ARCHITECT: SAMPLE SAMPLE SAMPLE
SAMPLE SAMPLE SAMPLE
SAMPLE SAMPLE SAMPLE
SAMPLE SAMPLE SAMPLE
SAMPLE SAMPLE SAMPLE

PROJECT: SAMPLE SAMPLE SAMPLE

LOCATION: SAMPLE SAMPLE SAMPLE

SCALE: 6" = 1'-0"

DATE: SAMPLE

DRAWN: SAMPLE

PAGE: 42 of 47

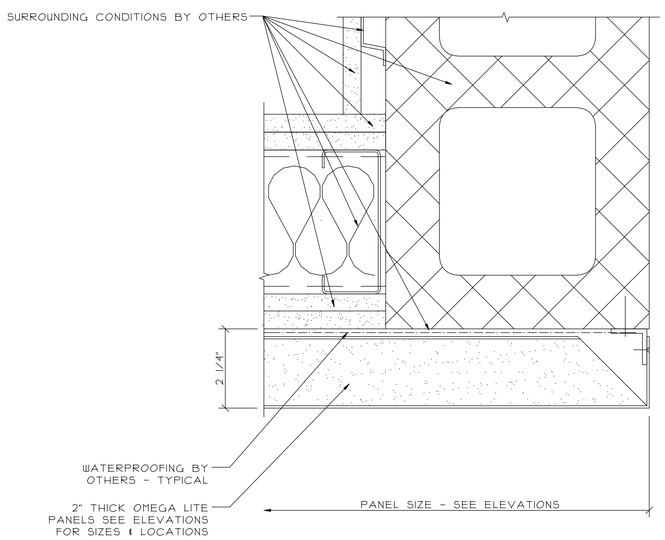

1 END PANEL

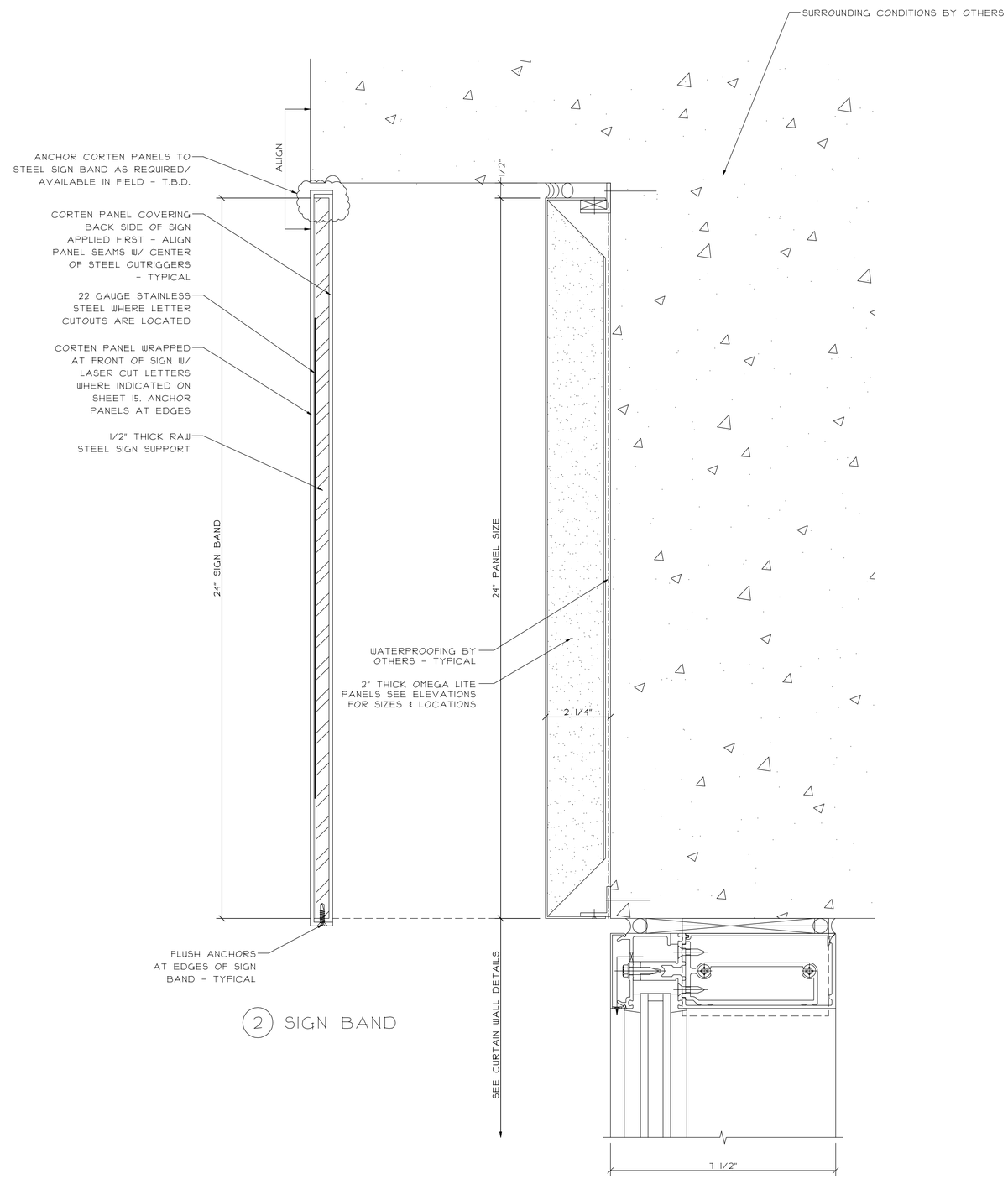

2 SIGN BAND

DATE:	REVISIONS:

GLAZING CONTRACTOR:
SAMPLE SAMPLE SAMPLE
SAMPLE SAMPLE SAMPLE
SAMPLE SAMPLE SAMPLE
SAMPLE SAMPLE SAMPLE
SAMPLE SAMPLE SAMPLE
SAMPLE SAMPLE SAMPLE

ARCHITECT:
SAMPLE SAMPLE SAMPLE
SAMPLE SAMPLE SAMPLE
SAMPLE SAMPLE SAMPLE
SAMPLE SAMPLE SAMPLE
SAMPLE SAMPLE SAMPLE
SAMPLE SAMPLE SAMPLE

PROJECT: SAMPLE SAMPLE SAMPLE

LOCATION: SAMPLE SAMPLE SAMPLE

SCALE: 6" = 1'-0"

DATE: SAMPLE

DRAWN: SAMPLE

PAGE: 43 of 47

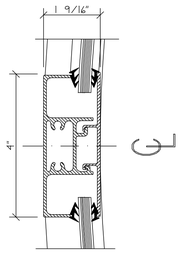

(A) REVOLVING DOOR WITH EXTERIOR STOPPING JAMB

(C) REVOLVING DOOR INTERIOR SWEEPING CENTER POST

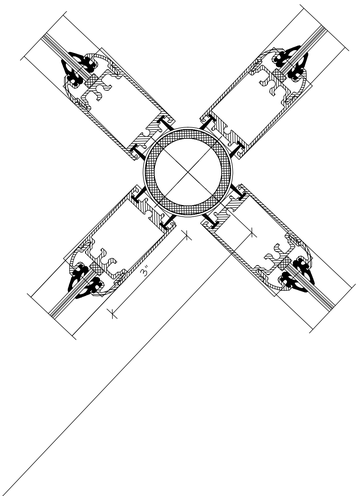

(B) REVOLVING DOOR FRONT OPENING

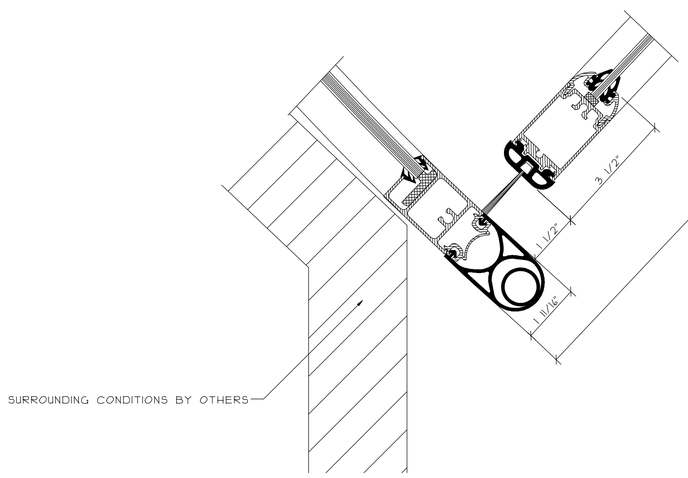

* SEE SEPARATE SUBMITTAL FOR ADDITIONAL INFORMATION ON REVOLVING DOOR *

REVISIONS:	DATE:

GLAZING CONTRACTOR:
SAMPLE SAMPLE SAMPLE
SAMPLE SAMPLE SAMPLE
SAMPLE SAMPLE SAMPLE
SAMPLE SAMPLE SAMPLE
SAMPLE SAMPLE SAMPLE
SAMPLE SAMPLE SAMPLE

ARCHITECT:
SAMPLE SAMPLE SAMPLE
SAMPLE SAMPLE SAMPLE
SAMPLE SAMPLE SAMPLE
SAMPLE SAMPLE SAMPLE
SAMPLE SAMPLE SAMPLE
SAMPLE SAMPLE SAMPLE

PROJECT: SAMPLE SAMPLE SAMPLE

LOCATION: SAMPLE SAMPLE SAMPLE

SCALE: 6" = 1'-0"

DATE: SAMPLE

DRAWN: SAMPLE

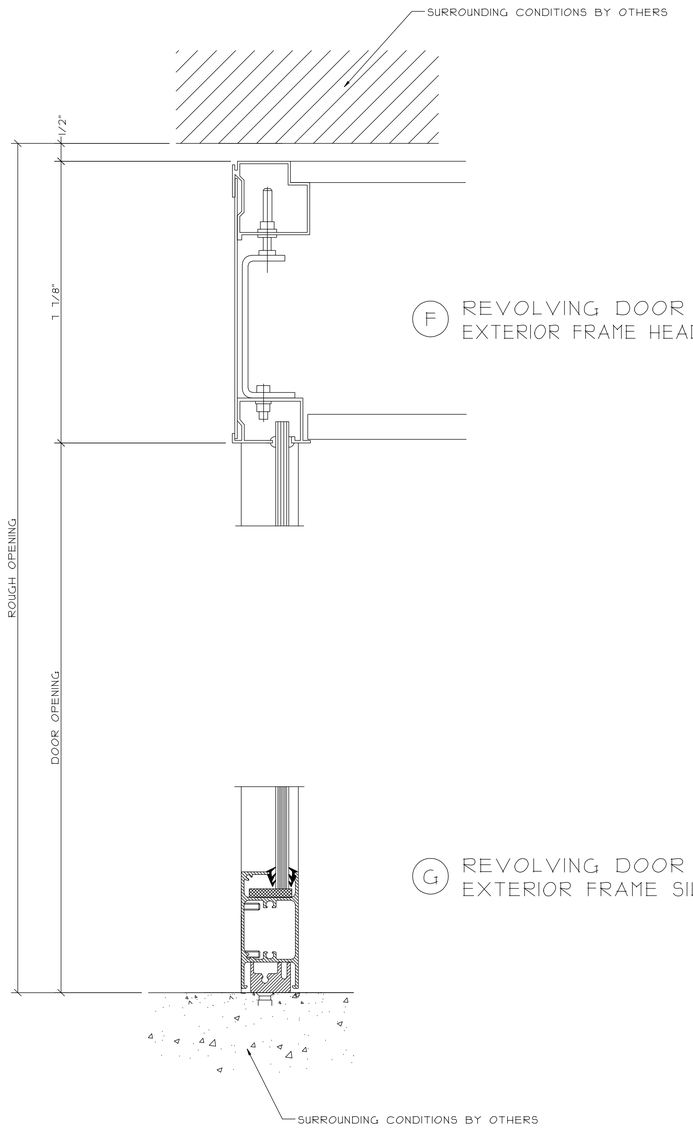

(F) REVOLVING DOOR
EXTERIOR FRAME HEAD

(G) REVOLVING DOOR
EXTERIOR FRAME SILL

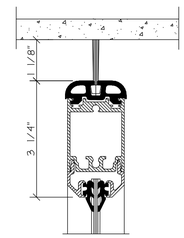

(H) INTERIOR SWEEPING
REVOLVING DOOR HEAD

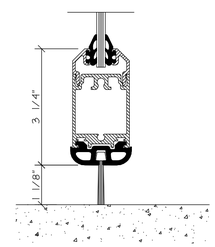

(J) INTERIOR SWEEPING
REVOLVING DOOR SILL

* SEE SEPARATE SUBMITTAL FOR ADDITIONAL INFORMATION ON REVOLVING DOOR *

REVISIONS:	DATE:

GLAZING CONTRACTOR:
SAMPLE SAMPLE SAMPLE
SAMPLE SAMPLE SAMPLE
SAMPLE SAMPLE SAMPLE
SAMPLE SAMPLE SAMPLE
SAMPLE SAMPLE SAMPLE

ARCHITECT:
SAMPLE SAMPLE SAMPLE
SAMPLE SAMPLE SAMPLE
SAMPLE SAMPLE SAMPLE
SAMPLE SAMPLE SAMPLE
SAMPLE SAMPLE SAMPLE

PROJECT: SAMPLE SAMPLE SAMPLE

LOCATION: SAMPLE SAMPLE SAMPLE

SCALE: 6" = 1'-0"

DATE: SAMPLE

DRAWN: SAMPLE

PAGE: 45 of 47