PROJECT TITLE

LOCATION

REPLACEMENT CURTAIN WALL & WINDOWS

GENERAL NOTES:

1. GENERAL NOTES

= NO SUNSHADE

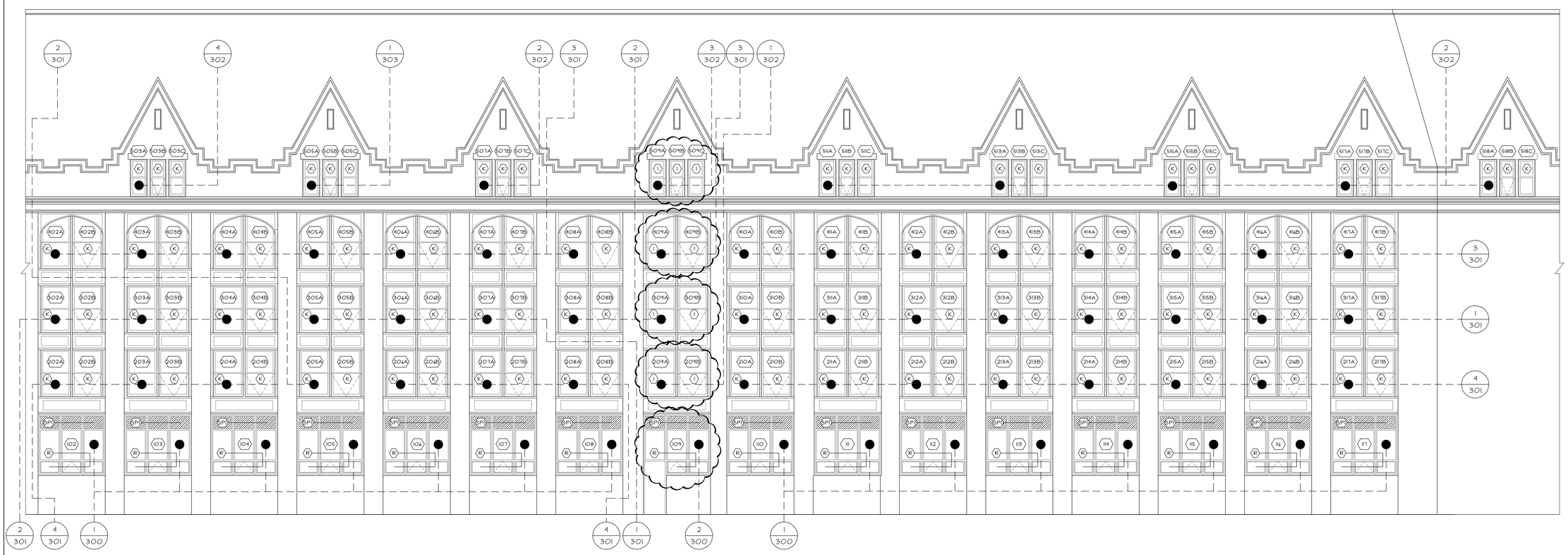

PARTIAL EAST ELEVATION

REF. M1 & F1/AA100

NO.	REVISION DESCRIPTION / ACTION TAKEN	BY	DATE

CONSTRUCTION MANAGER:

ARCHITECT INFO:

PROJECT INFO:

THIS DRAWING INCLUDING THE INFORMATION, DATA AND DESIGN IS CONFIDENTIAL AND THE PROPERTY OF AJAY GLASS CO. AND MUST NOT BE COPIED OR DISCLOSED TO ITS CONTENTS DIVULGED WITHOUT THE WRITTEN PERMISSION OF AJAY GLASS CO.

TITLE: LAYOUT ELEVATIONS

DRAWN BY / DATE: SAMPLE

CHECKED BY / DATE:

AJAY PROJECT MANAGER:

SCALE: NOT TO SCALE

AJAY PROJECT NO.:

DWG NO.: 101

PARTIAL WEST ELEVATION

REF. F4/AA102

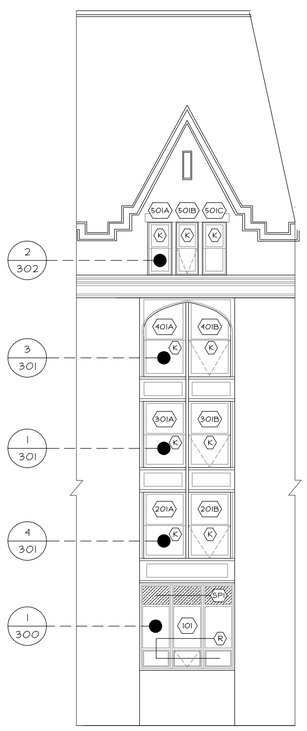

CONTINUED PARTIAL EAST ELEVATION

REF. M1 & F1/AA100

PARTIAL EAST ELEVATION

REF. M4/AA102

NO.	REVISION DESCRIPTION / ACTION TAKEN	BY	DATE

CONSTRUCTION MANAGER:

ARCHITECT INFO:

PROJECT INFO:

THIS DRAWING, INCLUDING THE INFORMATION, DATA, AND DESIGN IS CONFIDENTIAL AND THE PROPERTY OF AJAY GLASS CO. IT MAY NOT BE COPIED, REPRODUCED OR ITS CONTENTS DIVULGED WITHOUT THE WRITTEN PERMISSION OF AJAY GLASS CO.

TITLE: LAYOUT ELEVATIONS

DRAWN BY / DATE: SAMPLE

CHECKED BY / DATE:

AJAY PROJECT MANAGER:

SCALE: NOT TO SCALE

AJAY PROJECT NO.:

DWG NO.: 102

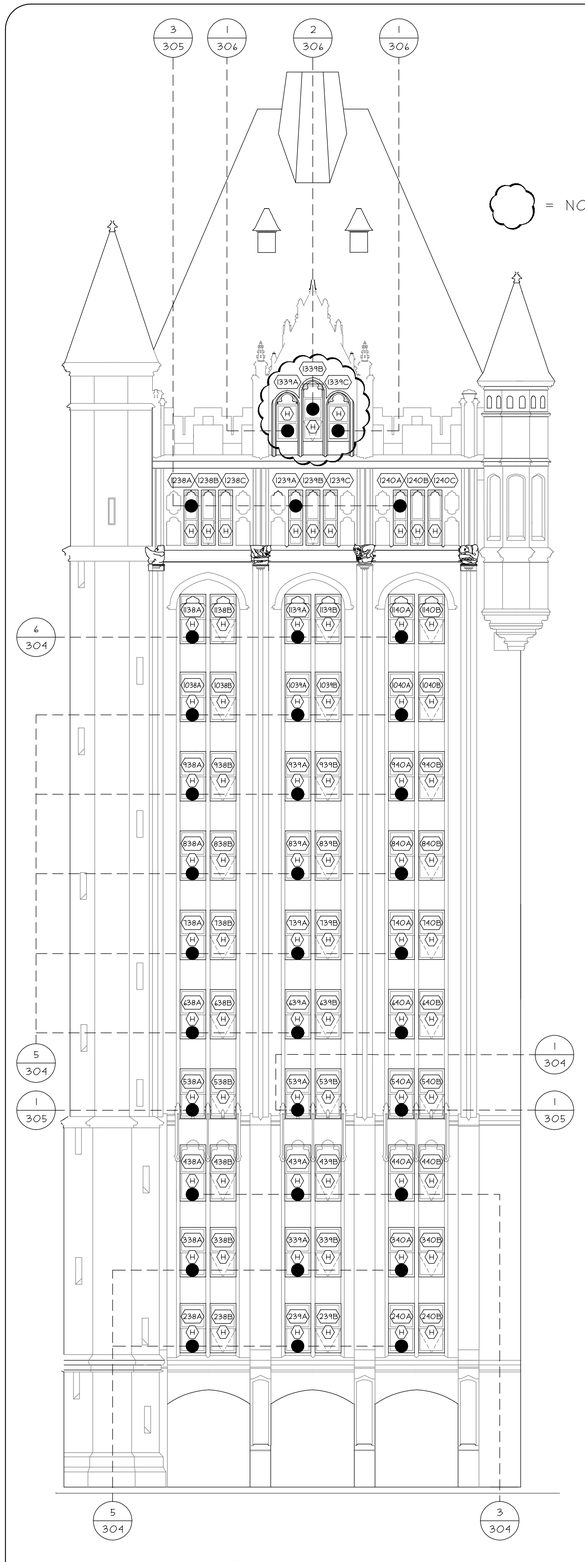

WEST ELEVATION TOWER-ALT. NO. 1

REF. M1/AA101

= NO SUNSHADE

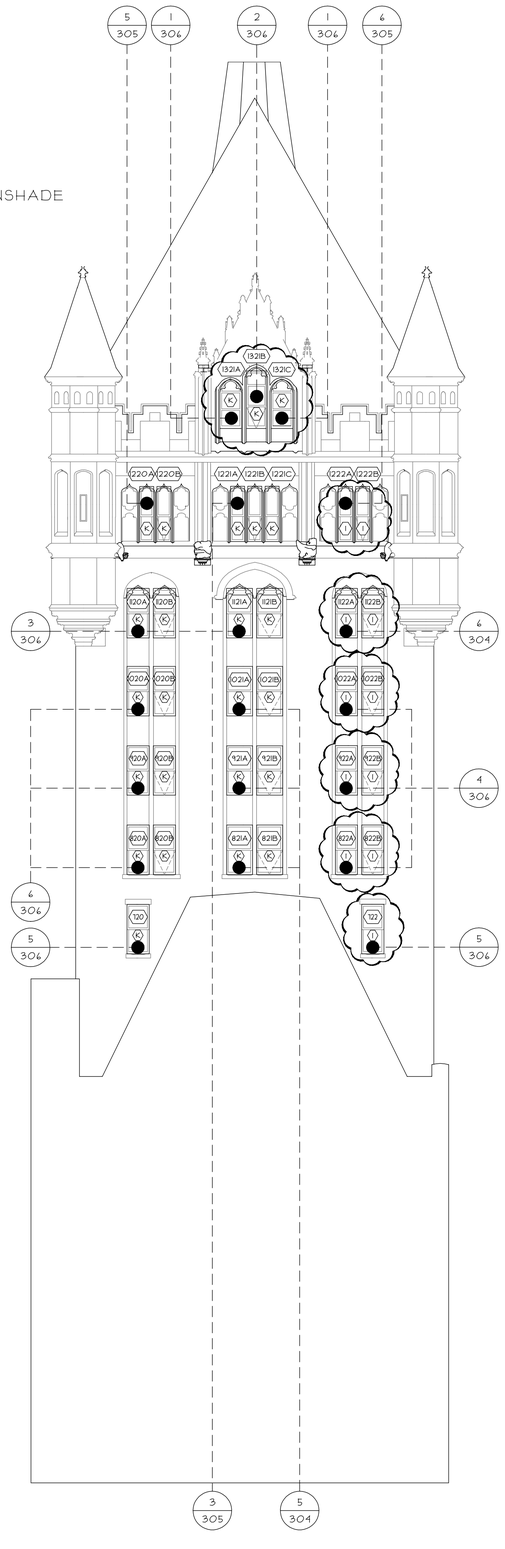

SOUTH ELEVATION TOWER

REF. M5/AA101

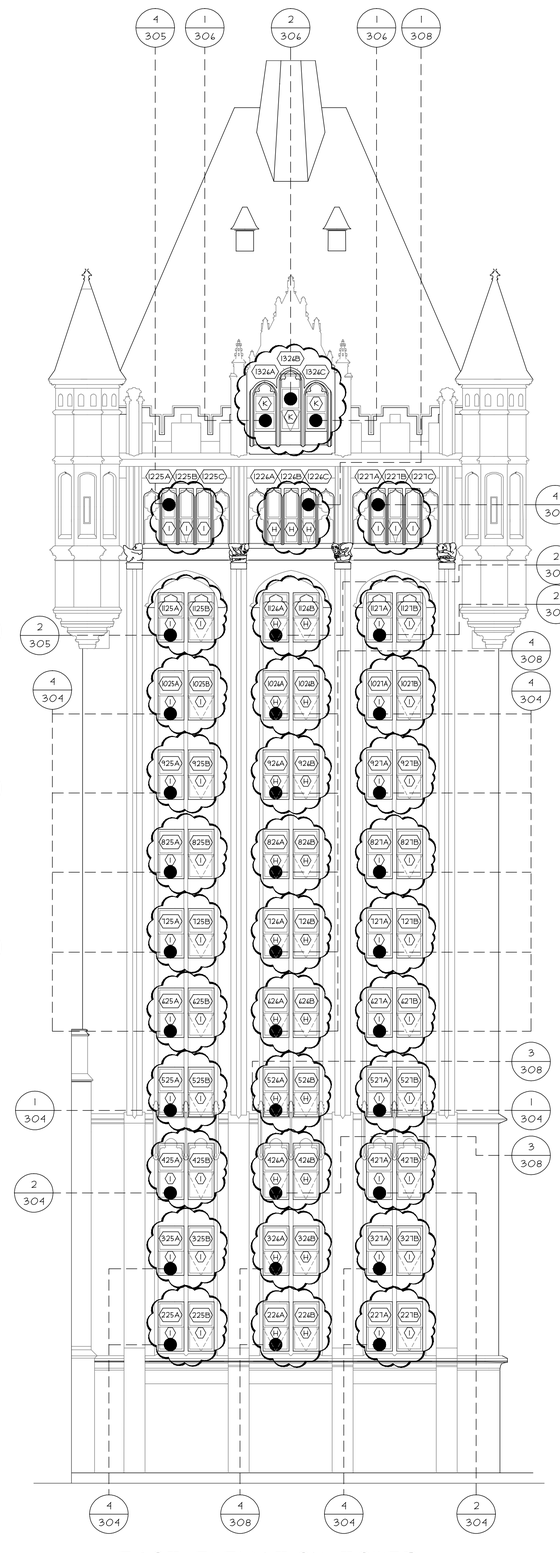

EAST ELEVATION TOWER

REF. M9/AA101

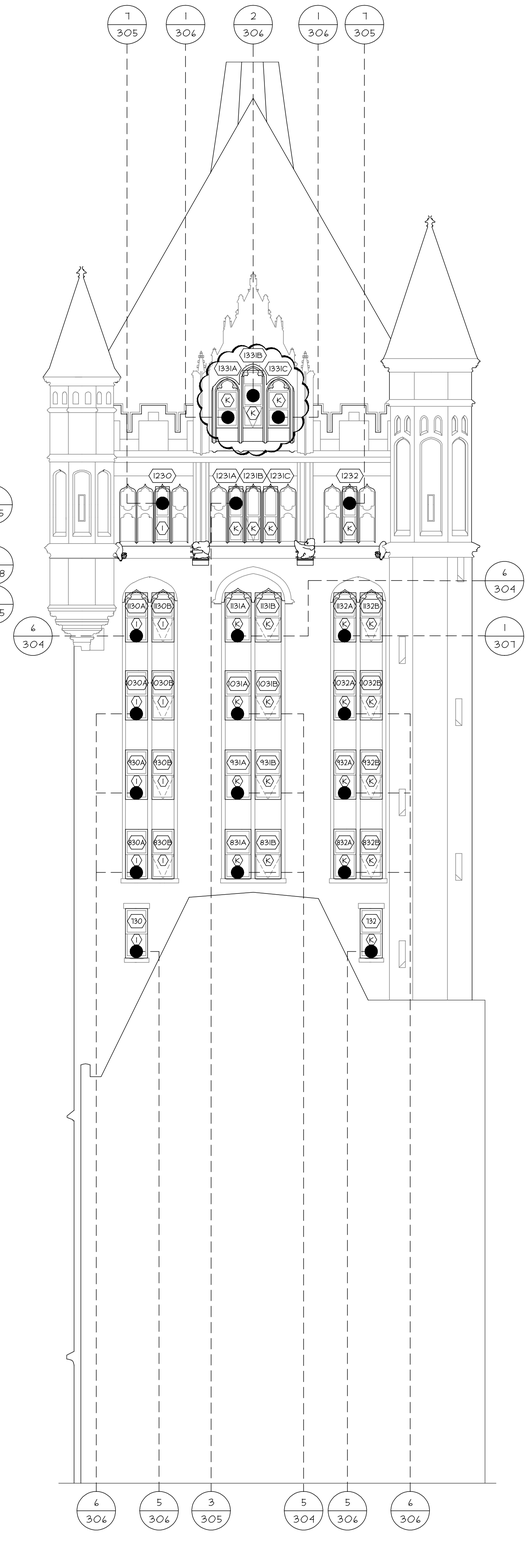

NORTH ELEVATION TOWER

REF. M13/AA101

NO.	REVISION DESCRIPTION / ACTION TAKEN	BY	DATE

CONSTRUCTION MANAGER:

ARCHITECT INFO:

PROJECT INFO:

THIS DRAWING INCLUDING THE INFORMATION, DATA, AND DESIGN IS CONFIDENTIAL AND THE PROPERTY OF AJAX GLASS CO. IT IS NOT TO BE COPIED, REPRODUCED OR ITS CONTENTS DIVULGED WITHOUT THE WRITTEN PERMISSION OF AJAX GLASS CO.

TITLE: LAYOUT ELEVATIONS

DRAWN BY / DATE: SAMPLE

CHECKED BY / DATE:

AJAX PROJECT MANAGER:

SCALE: NOT TO SCALE

AJAX PROJECT NO.:

DWG NO.: 103

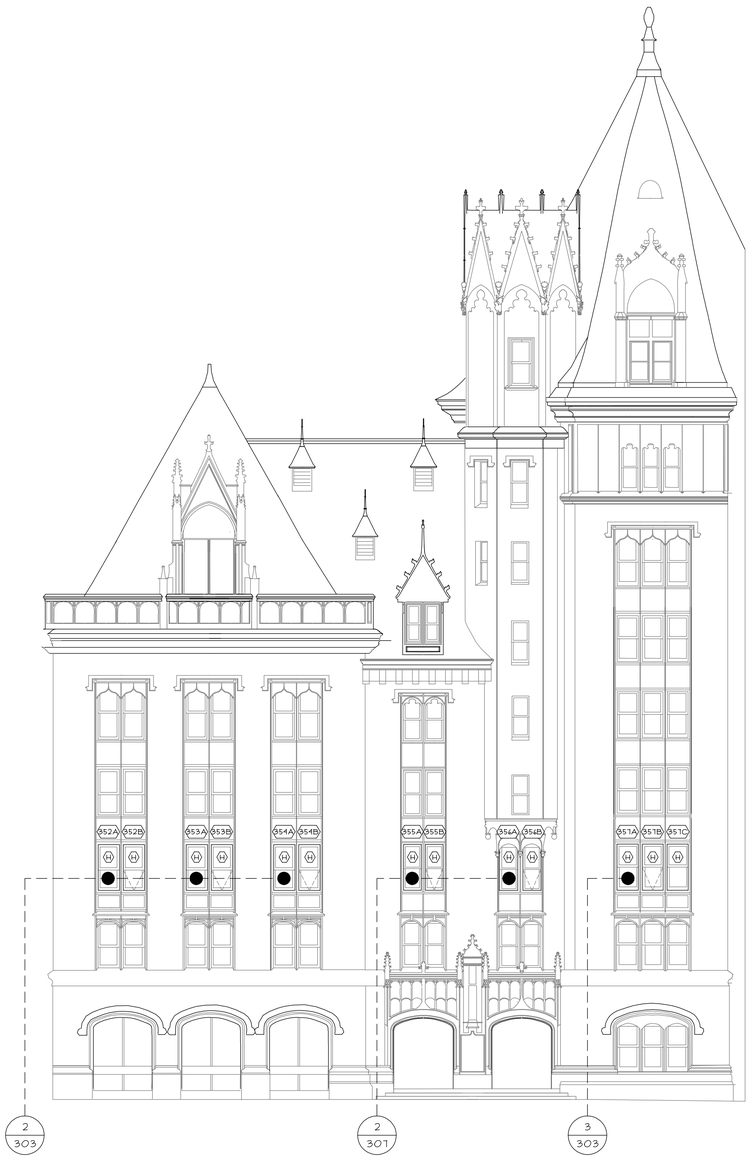

PARTIAL WEST ELEVATION

REF. M1/AA103

PARTIAL SOUTHWEST ELEVATION

REF. M7/AA103

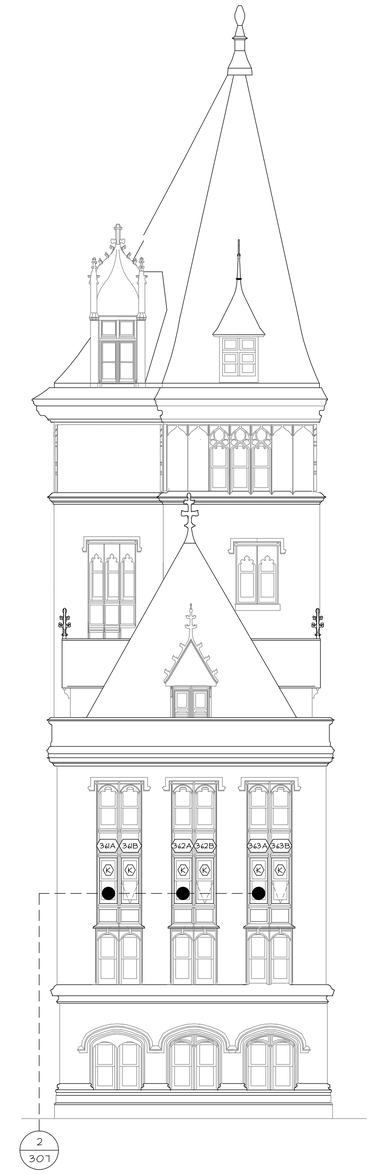

PARTIAL SOUTHEAST ELEVATION

REF. M12/AA103

NO.	REVISION DESCRIPTION / ACTION TAKEN	BY	DATE

CONSTRUCTION MANAGER:

ARCHITECT INFO:

PROJECT INFO:

THIS DRAWING INCLUDING THE INFORMATION, DATA AND DESIGN IS CONFIDENTIAL AND THE PROPERTY OF AJAY GLASS CO. IT IS NOT TO BE REPRODUCED OR ITS CONTENTS DIVULGED WITHOUT THE WRITTEN PERMISSION OF AJAY GLASS CO.

TITLE
LAYOUT
ELEVATIONS

DRAWN BY / DATE
SAMPLE

CHECKED BY / DATE

AJAY PROJECT MANAGER:

SCALE:
NOT TO SCALE

AJAY PROJECT NO.:

DWG NO.:
104

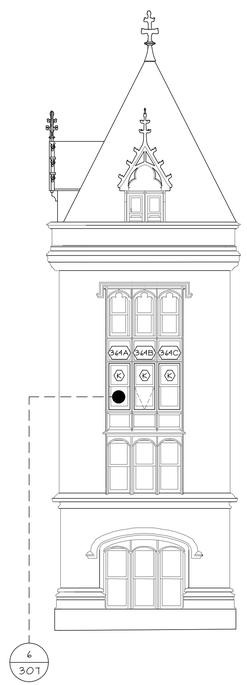

PARTIAL EAST ELEVATION

REF. F15/AA104

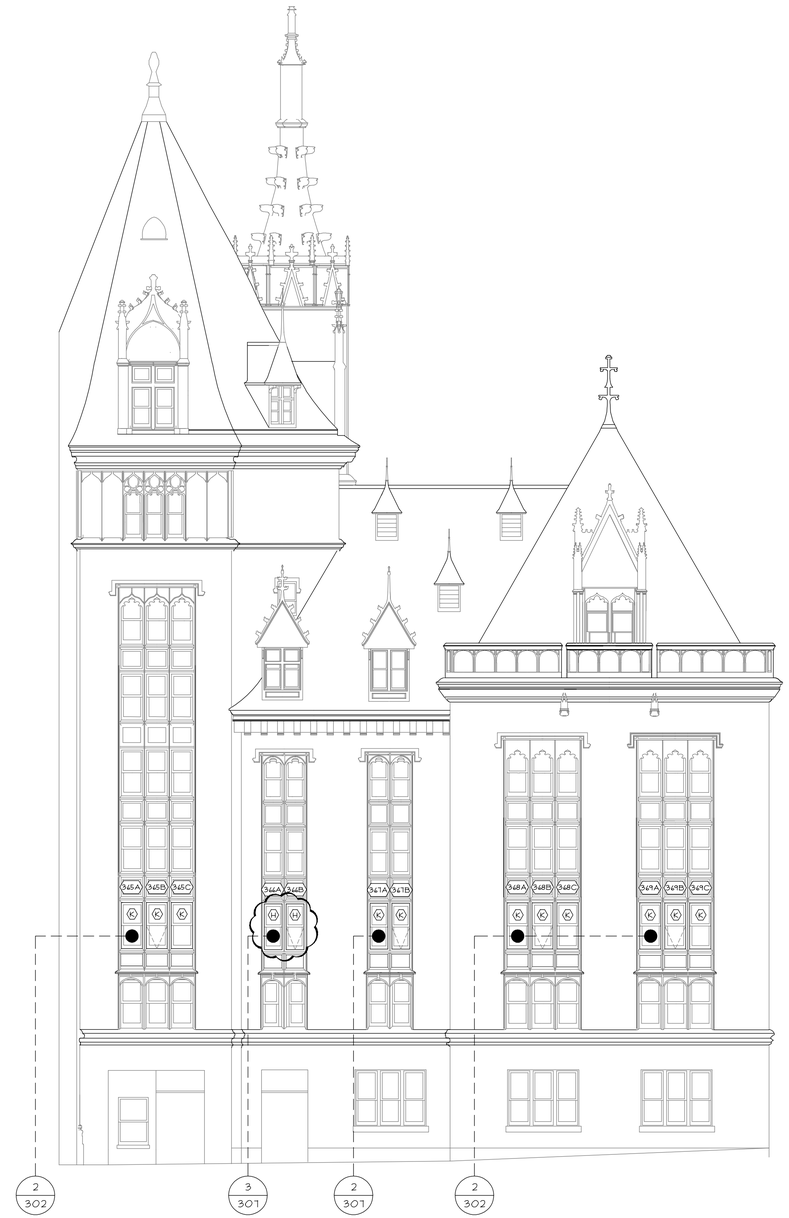

PARTIAL EAST ELEVATION

REF. M8/AA104

= NO SUNSHADE

NO.	REVISION DESCRIPTION / ACTION TAKEN	BY	DATE

CONSTRUCTION MANAGER:

ARCHITECT INFO:

PROJECT INFO:

THIS DRAWING INCLUDING THE INFORMATION, DATA AND DESIGN IS CONFIDENTIAL AND THE PROPERTY OF AJAY GLASS CO. IT'S NOT TO BE COPIED OR REPRODUCED IN ITS CONTENTS DIVULGED WITHOUT THE WRITTEN PERMISSION OF AJAY GLASS CO.

TITLE

LAYOUT
ELEVATIONS

DRAWN BY / DATE

SAMPLE

CHECKED BY / DATE

AJAY PROJECT MANAGER:

SCALE:

NOT TO SCALE

AJAY PROJECT NO.:

DWG NO.:

105

- DENOTES LOCATION OF "F" ANCHOR
  SEE DETAIL 1 ON PAGE 403

- DENOTES LOCATION OF "T" ANCHOR
  SEE DETAIL 2 ON PAGE 403

- DENOTES CONDITIONS OF SHIM AND CAULK
  AREAS TO ALLOW VARIANCE IN SIZE

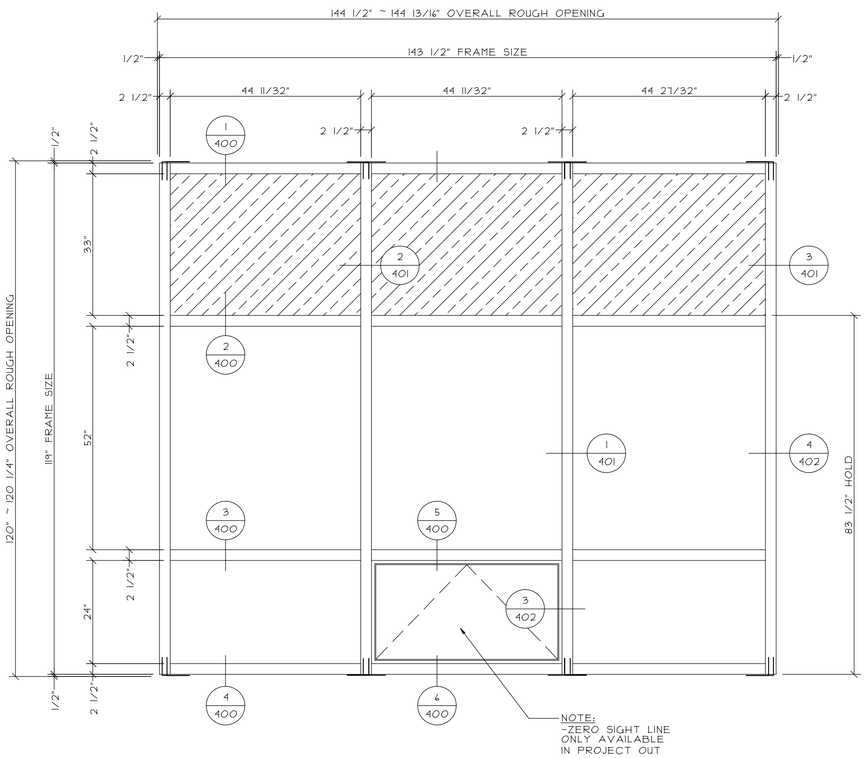

1

TYPE A
16 TOTAL
WAUSAU CURTAIN WALL W/ 3250-Z OPERABLE INSERT
TYPE SPI GLAZING AT SHADED AREAS
TYPE R GLAZING AT CLEAR AREAS

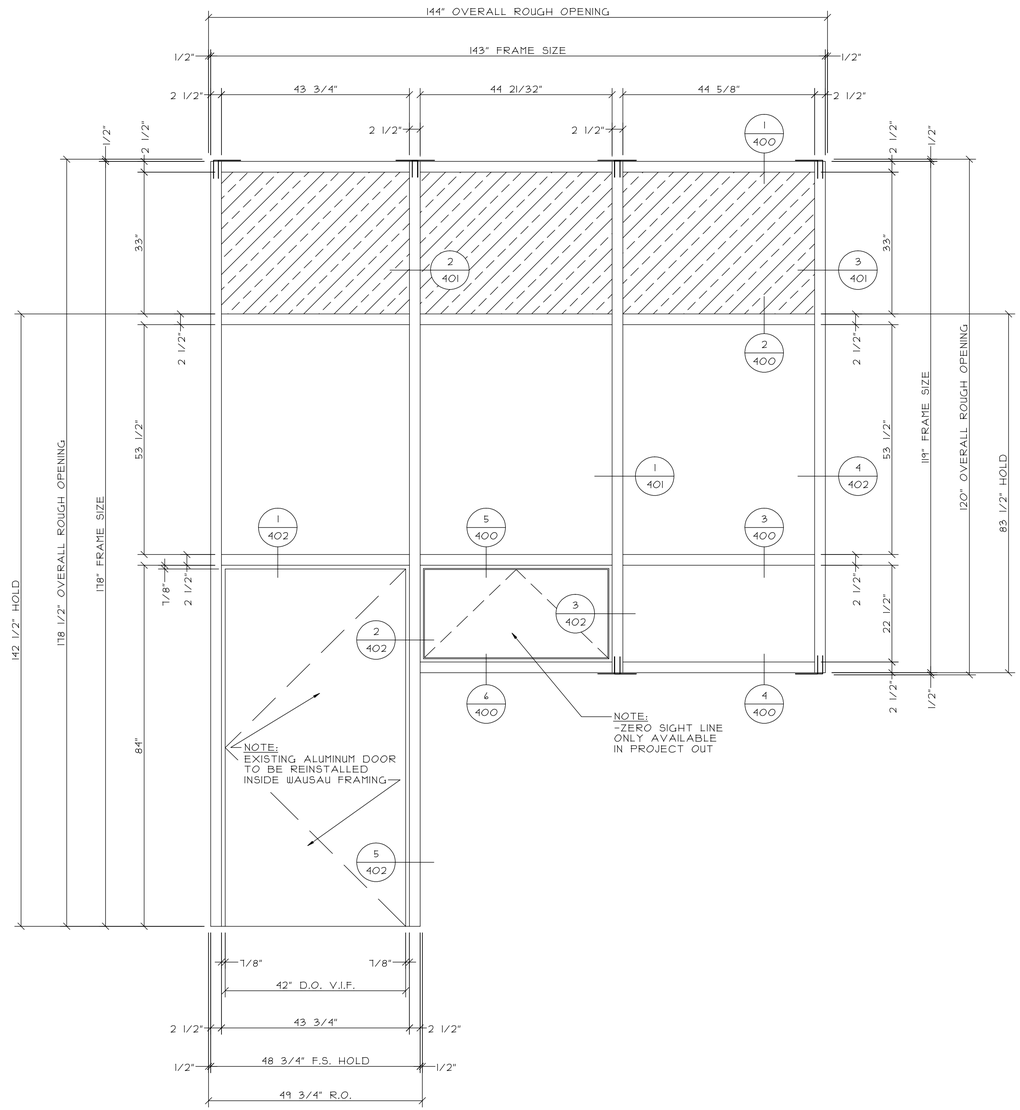

2

TYPE B NO SUNSHADE
1 TOTAL
WAUSAU CURTAIN WALL W/ 3250-Z OPERABLE INSERT
TYPE SPI GLAZING AT SHADED AREAS
TYPE R GLAZING AT CLEAR AREAS

NO.	REVISION DESCRIPTION / ACTION TAKEN	BY	DATE

CONSTRUCTION MANAGER:

ARCHITECT INFO:

PROJECT INFO:

THIS DRAWING INCLUDING THE INFORMATION, DATA, AND DESIGN IS CONFIDENTIAL AND THE PROPERTY OF AJAY GLASS CO. IT'S NOT TO BE USED, REPRODUCED OR ITS CONTENTS DIVULGED WITHOUT THE WRITTEN PERMISSION OF AJAY GLASS CO.

TITLE
CURTAIN WALL ELEVATIONS

DRAWN BY / DATE
SAMPLE

CHECKED BY / DATE

AJAY PROJECT MANAGER:

SCALE:
3/4" = 1'-0"

AJAY PROJECT NO.:

DWG NO.:
300

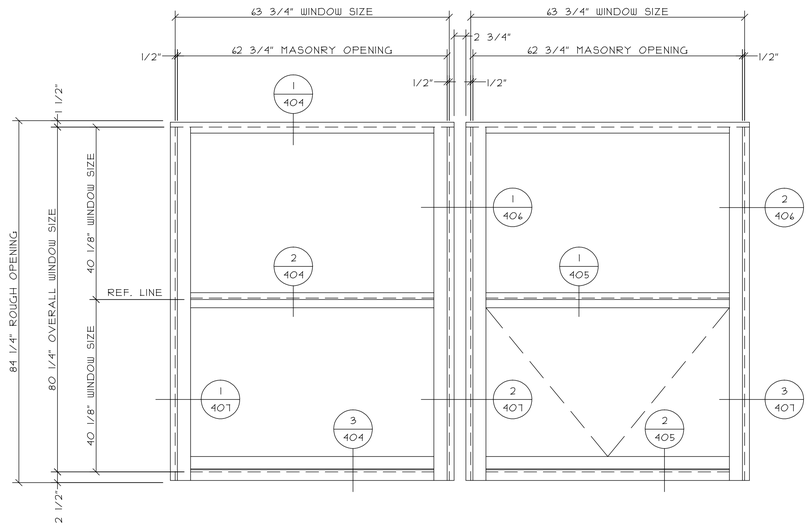

1

TYPE C1
12 TOTAL
WAUSAU 3250LP SERIES FRAMES
TYPE K GLAZING

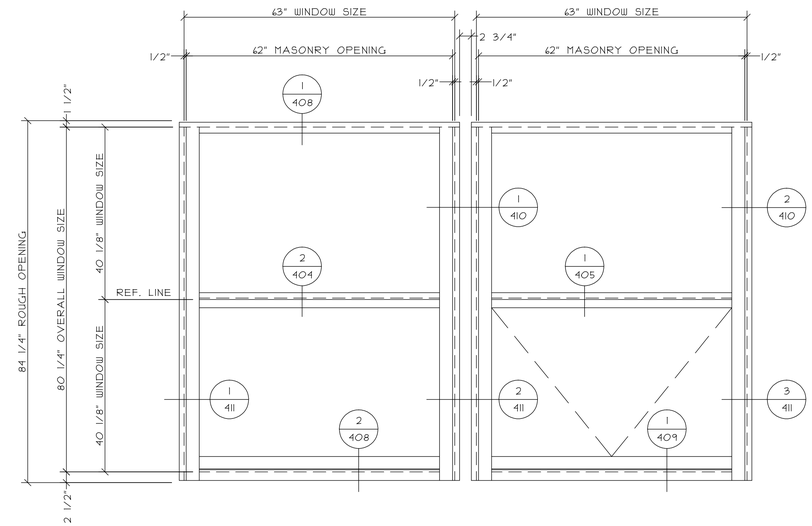

2

TYPE C2
6 TOTAL
WAUSAU 3250LP SERIES FRAMES
1 TOTAL TYPE 1 GLAZING
5 TOTAL TYPE K GLAZING

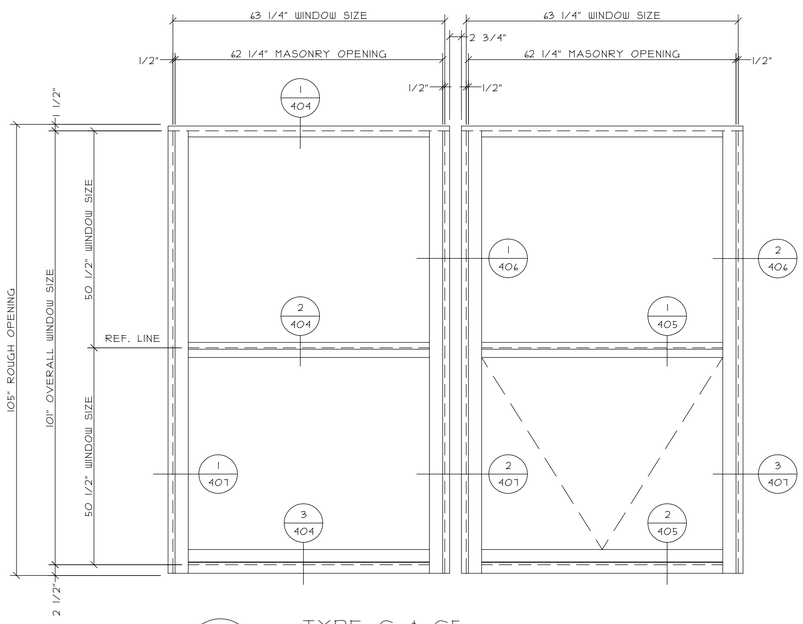

3

TYPE C & C5
17 TOTAL
WAUSAU 3250LP SERIES FRAMES
1 TOTAL TYPE 1 GLAZING
16 TOTAL TYPE K GLAZING

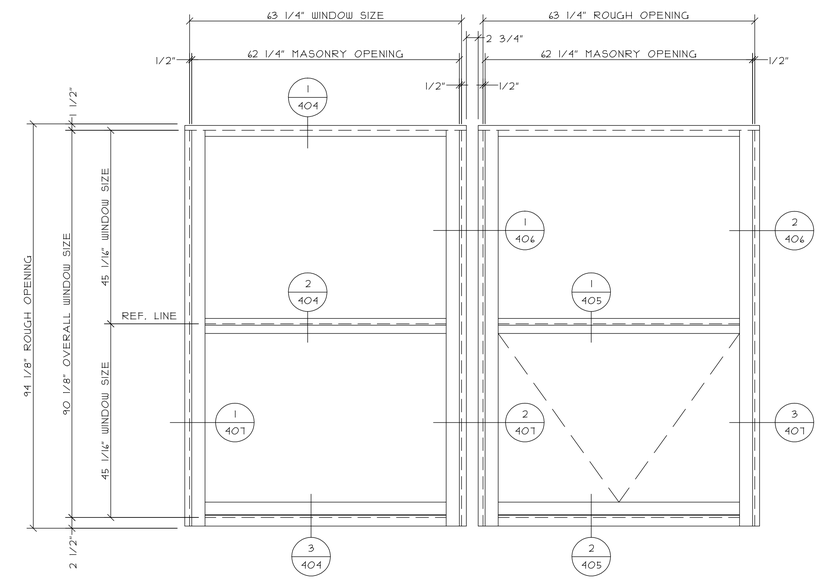

4

TYPE C3
15 TOTAL
WAUSAU 3250LP SERIES FRAMES
TYPE K GLAZING

NO.	REVISION DESCRIPTION / ACTION TAKEN	BY	DATE

CONSTRUCTION MANAGER:

ARCHITECT INFO:

PROJECT INFO:

THIS DRAWING INCLUDING THE INFORMATION, DATA AND DESIGN IS CONFIDENTIAL AND THE PROPERTY OF AJAX GLASS CO. IT IS NOT TO BE COPIED, REPRODUCED OR ITS CONTENTS DIVULGED WITHOUT THE WRITTEN PERMISSION OF AJAX GLASS CO.

TITLE
CURTAIN WALL ELEVATIONS

DRAWN BY / DATE
SAMPLE

CHECKED BY / DATE

AJAX PROJECT MANAGER:

SCALE:
3/4" = 1'-0"

AJAX PROJECT NO.:

DWG NO.:
301

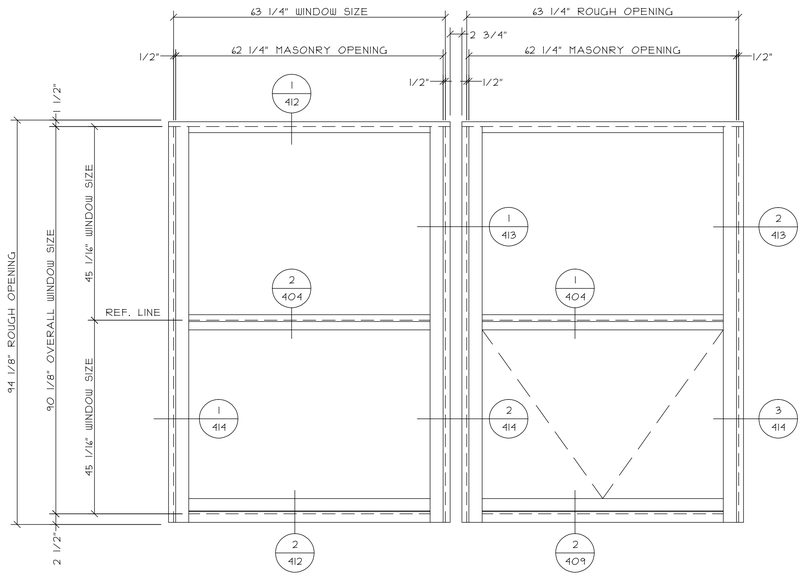

1

TYPE C4

1 TOTAL

WAUSAU 3250LP SERIES FRAMES

TYPE 1 GLAZING

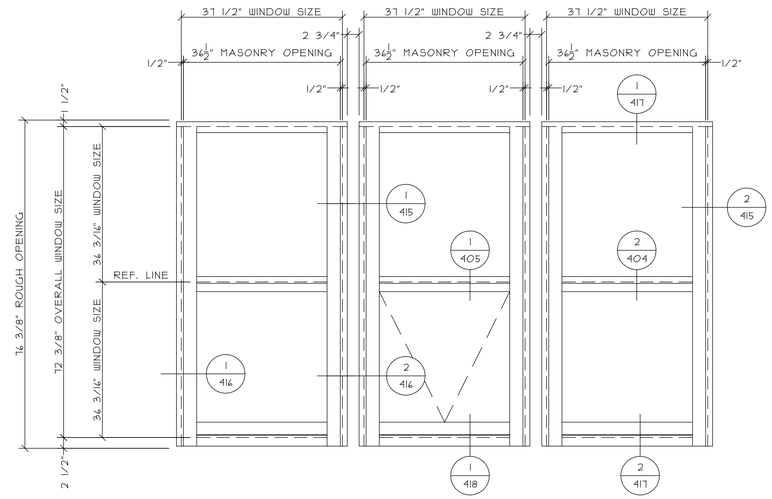

2

TYPE D

10 TOTAL

WAUSAU 3250LP SERIES FRAMES

TYPE K GLAZING

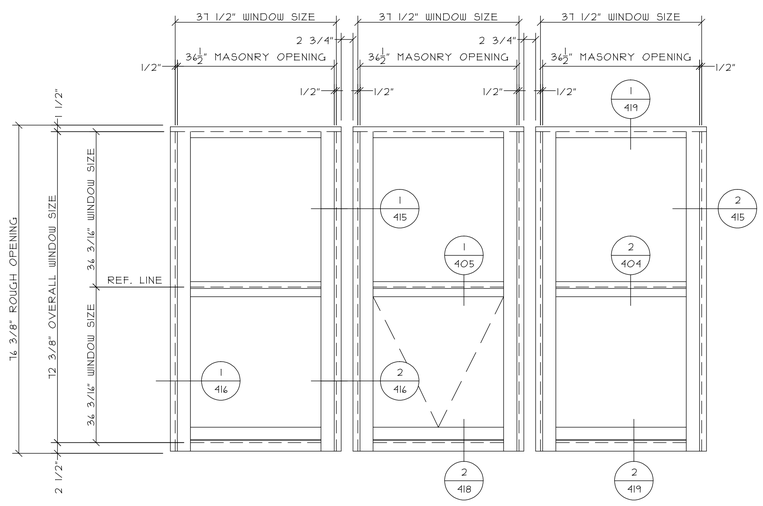

3

TYPE D3

1 TOTAL

WAUSAU 3250LP SERIES FRAMES

TYPE 1 GLAZING

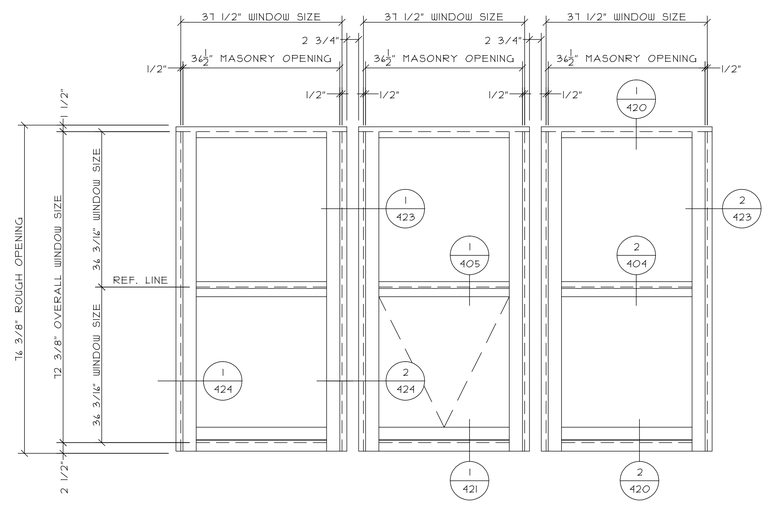

4

TYPE D4

1 TOTAL

WAUSAU 3250LP SERIES FRAMES

TYPE K GLAZING

NO.	REVISION DESCRIPTION / ACTION TAKEN	BY	DATE

CONSTRUCTION MANAGER:

ARCHITECT INFO:

PROJECT INFO:

THIS DRAWING INCLUDING THE INFORMATION, DATA AND DESIGN IS CONFIDENTIAL AND THE PROPERTY OF AJAY GLASS CO. IT IS NOT TO BE COPIED, REPRODUCED OR ITS CONTENTS DIVULGED WITHOUT THE WRITTEN PERMISSION OF AJAY GLASS CO.

TITLE
CURTAIN WALL ELEVATIONS

DRAWN BY / DATE
SAMPLE

CHECKED BY / DATE

AJAY PROJECT MANAGER:

SCALE:
3/4" = 1'-0"

AJAY PROJECT NO.:

DWG NO.:
302

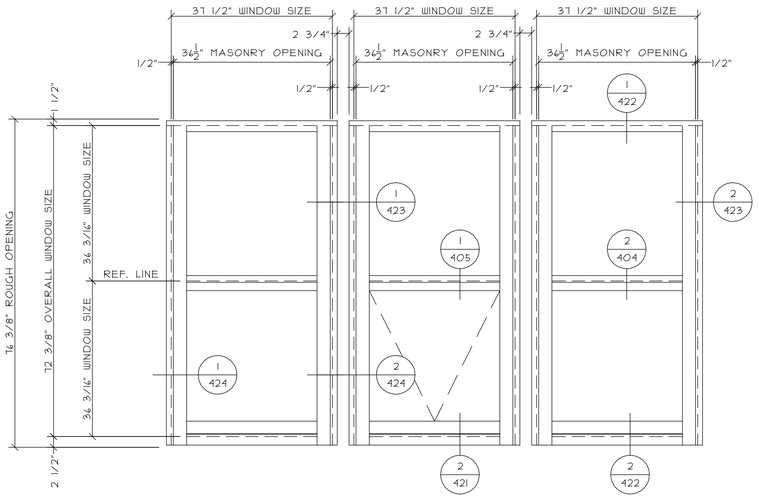

1

TYPE D5

1 TOTAL

WAUSAU 3250LP SERIES FRAMES

TYPE K GLAZING

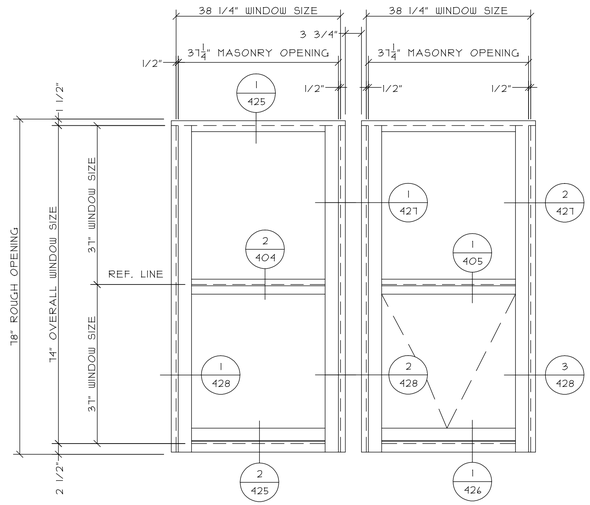

2

TYPE D1

3 TOTAL

WAUSAU 3250LP SERIES FRAMES

TYPE H GLAZING

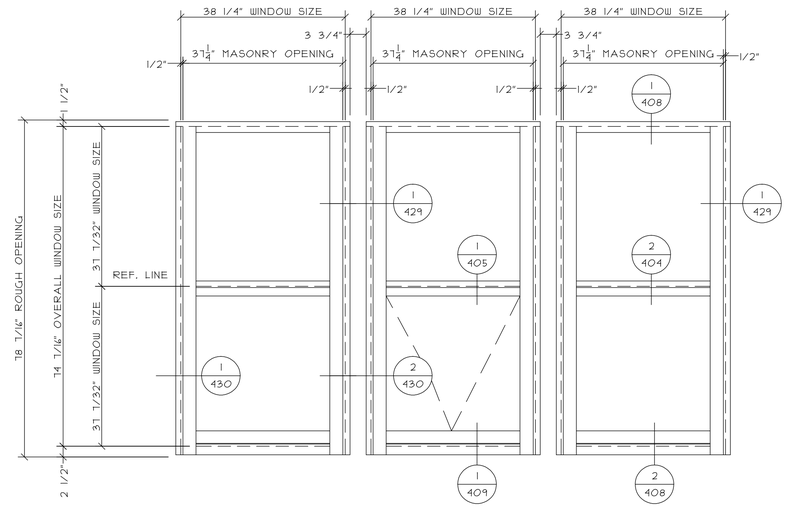

3

TYPE D2

2 TOTAL

WAUSAU 3250LP SERIES FRAMES

TYPE H GLAZING

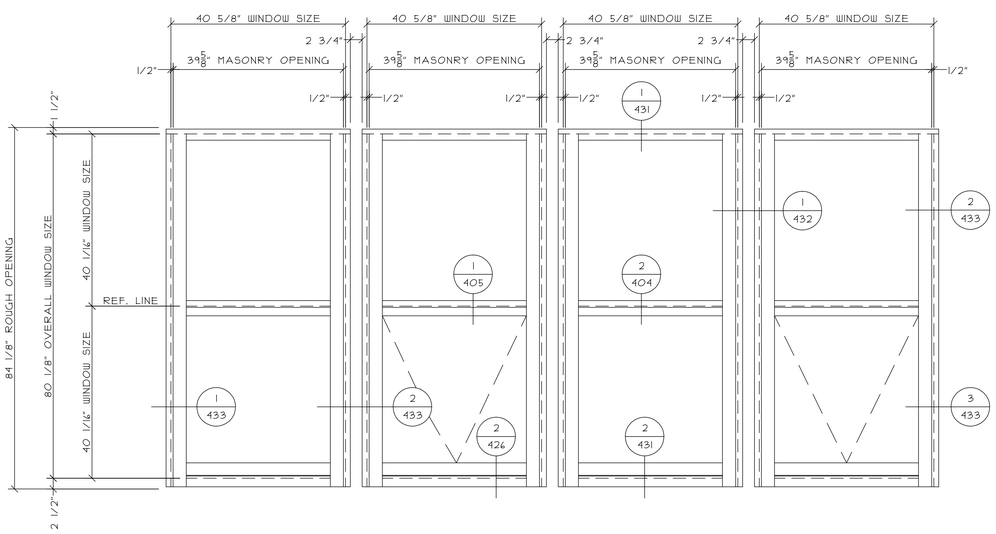

4

TYPE K

2 TOTAL

WAUSAU 3250LP SERIES FRAMES

1 TOTAL TYPE H GLAZING
1 TOTAL TYPE K GLAZING

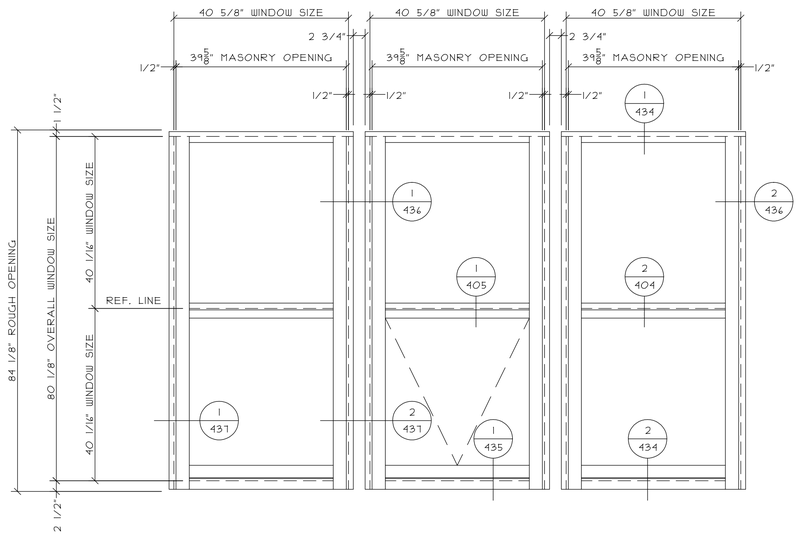

5

TYPE K1

20 TOTAL

WAUSAU 3250LP SERIES FRAMES

10 TOTAL TYPE H GLAZING
1 TOTAL TYPE I GLAZING
9 TOTAL TYPE K GLAZING

NO.	REVISION DESCRIPTION / ACTION TAKEN	BY	DATE

CONSTRUCTION MANAGER:

ARCHITECT INFO:

PROJECT INFO:

THIS DRAWING INCLUDING THE INFORMATION, DATA AND DESIGN IS CONFIDENTIAL AND THE PROPERTY OF AJAY GLASS CO. IT MAY NOT BE COPIED, REPRODUCED OR ITS CONTENTS DIVULGED WITHOUT THE WRITTEN PERMISSION OF AJAY GLASS CO.

TITLE
CURTAIN WALL ELEVATIONS

DRAWN BY / DATE
SAMPLE

CHECKED BY / DATE

AJAY PROJECT MANAGER:

SCALE:
3/4" = 1'-0"

AJAY PROJECT NO.:

DWG NO.:
303

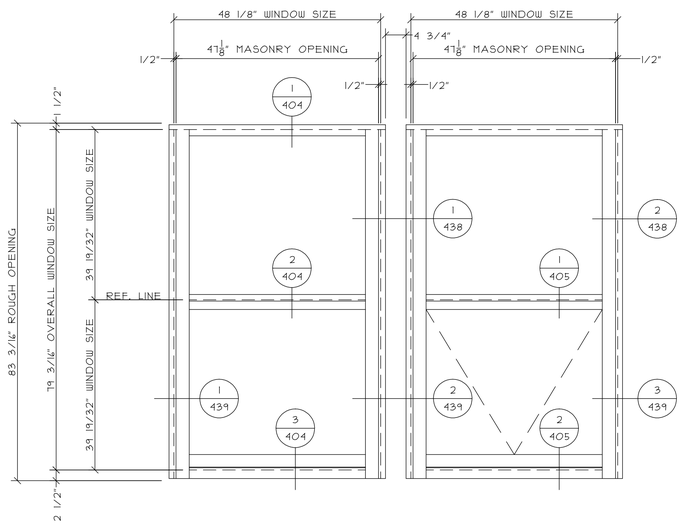

1

TYPE E
3 TOTAL
WAUSAU 3250LP SERIES FRAMES
2 TOTAL TYPE I GLAZING
1 TOTAL TYPE H GLAZING

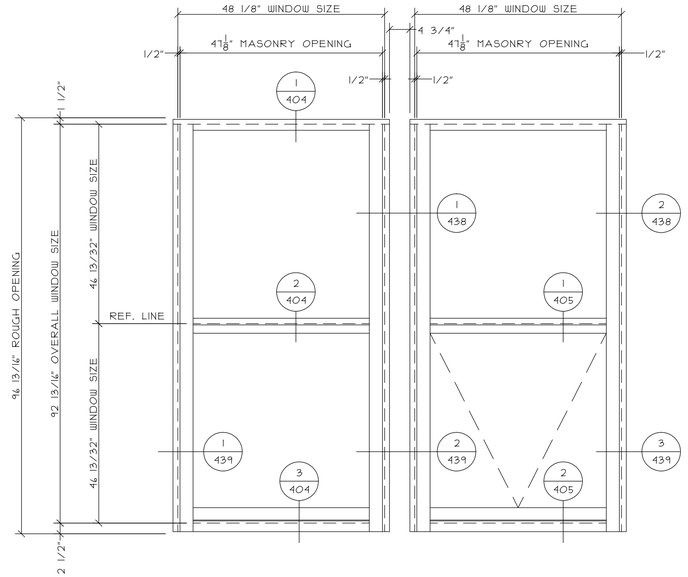

2

TYPE EI
2 TOTAL
WAUSAU 3250LP SERIES FRAMES
TYPE I GLAZING

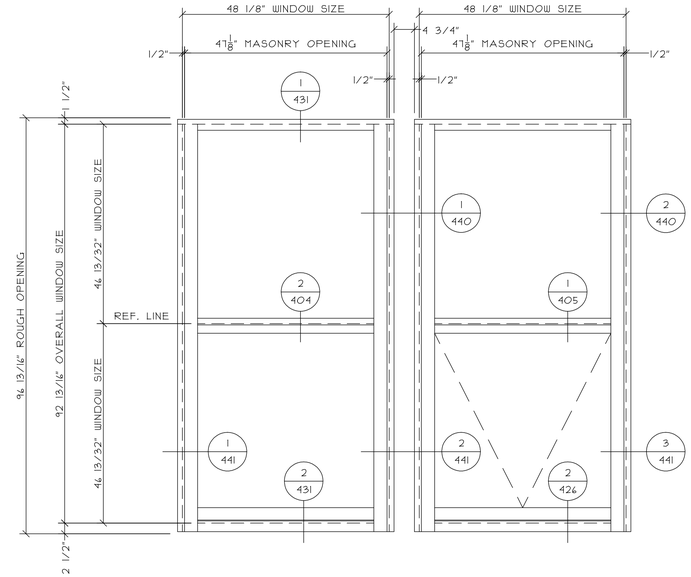

3

TYPE EIA
3 TOTAL
WAUSAU 3250LP SERIES FRAMES
TYPE H GLAZING

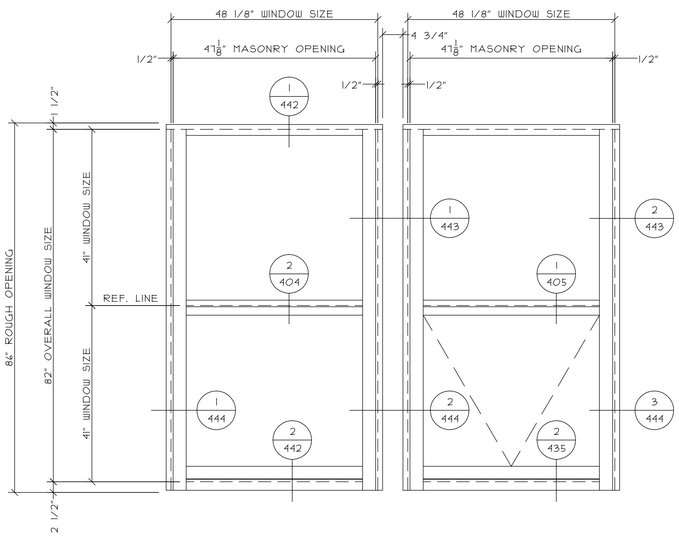

4

TYPE E2
14 TOTAL
WAUSAU 3250LP SERIES FRAMES
TYPE I GLAZING

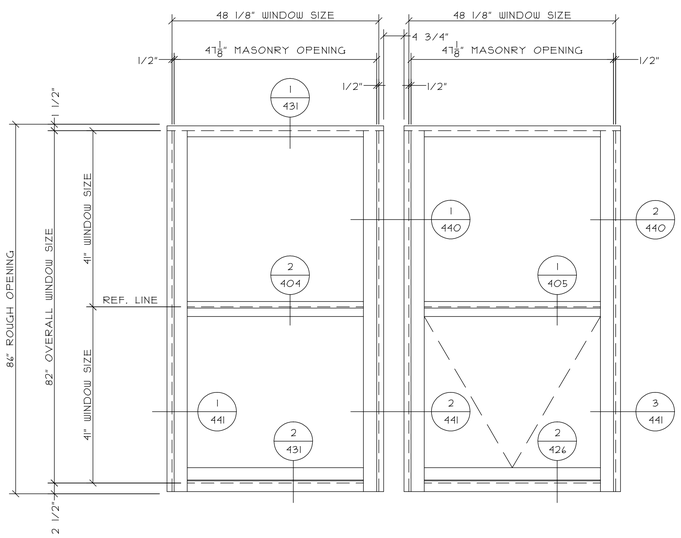

5

TYPE E3
21 TOTAL
WAUSAU 3250LP SERIES FRAMES
21 TOTAL TYPE H GLAZING
6 TOTAL TYPE K GLAZING

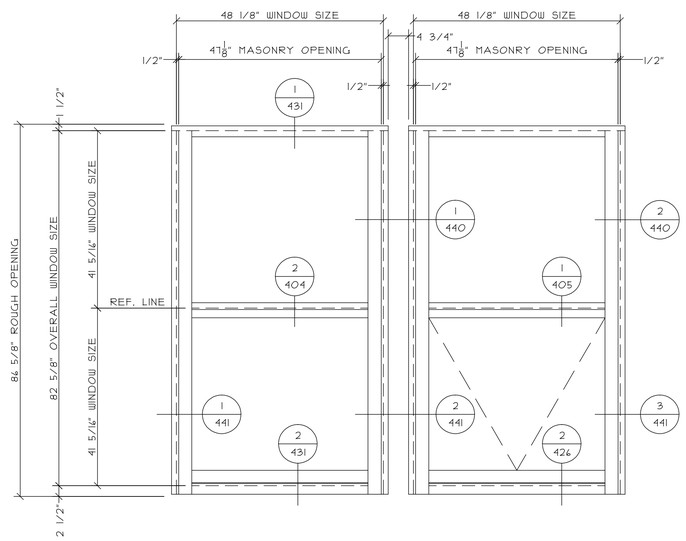

6

TYPE E4
6 TOTAL
WAUSAU 3250LP SERIES FRAMES
2 TOTAL TYPE I GLAZING
3 TOTAL TYPE H GLAZING
1 TOTAL TYPE H GLAZING

NO.	REVISION DESCRIPTION / ACTION TAKEN	BY	DATE

CONSTRUCTION MANAGER:

ARCHITECT INFO:

PROJECT INFO:

THIS DRAWING INCLUDING THE INFORMATION, DATA AND DESIGN IS CONFIDENTIAL AND THE PROPERTY OF AJAX GLASS. IT IS NOT TO BE COPIED, REPRODUCED OR ITS CONTENTS DIVULGED WITHOUT THE WRITTEN PERMISSION OF AJAX GLASS CO.

TITLE
CURTAIN WALL ELEVATIONS

DRAWN BY / DATE
SAMPLE

CHECKED BY / DATE

AJAX PROJECT MANAGER:

SCALE:
3/4" = 1'-0"

AJAX PROJECT NO.:

DWG NO.:
304

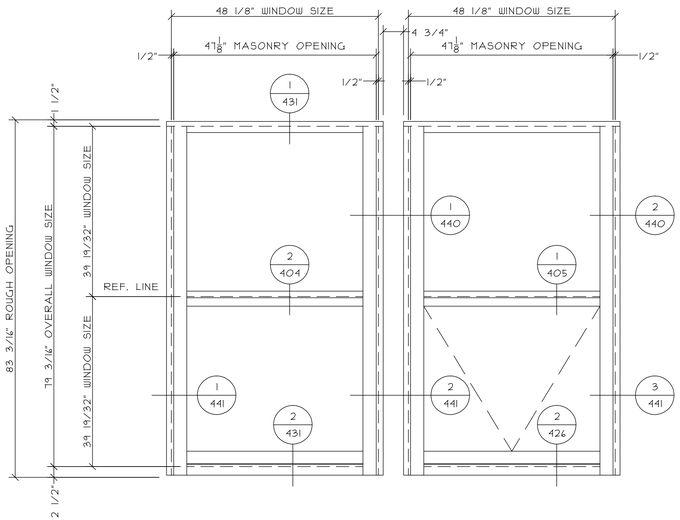

1

TYPE E5
2 TOTAL
WAUSAU 3250LP SERIES FRAMES
TYPE H GLAZING

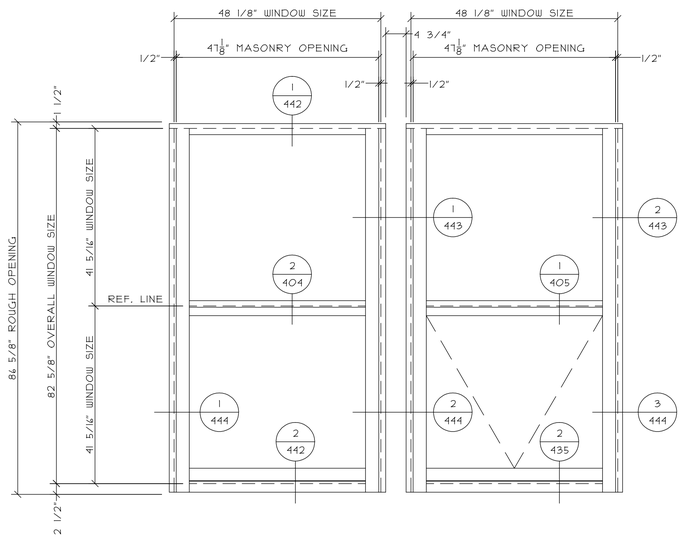

2

TYPE E6
2 TOTAL
WAUSAU 3250LP SERIES FRAMES
TYPE I GLAZING

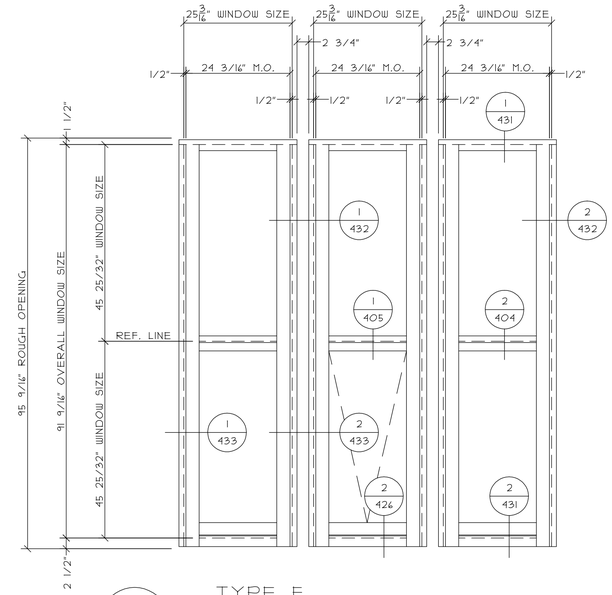

3

TYPE F
5 TOTAL
WAUSAU 3250LP SERIES FRAMES
3 TOTAL TYPE H GLAZING
2 TOTAL TYPE K GLAZING

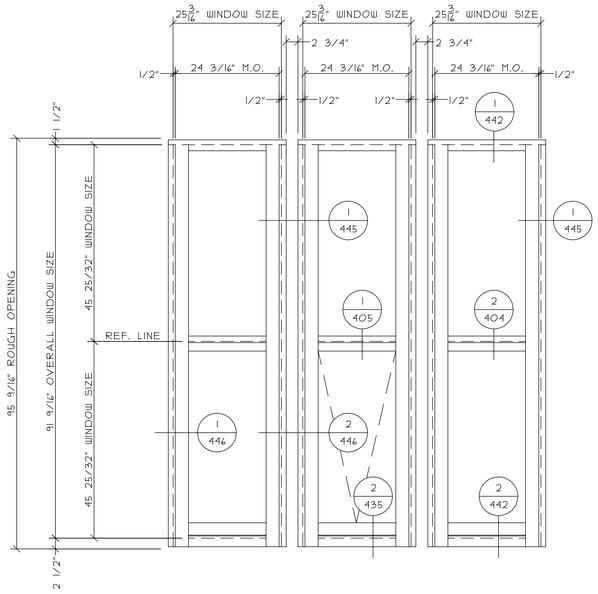

4

TYPE F1
2 TOTAL
WAUSAU 3250LP SERIES FRAMES
TYPE I GLAZING

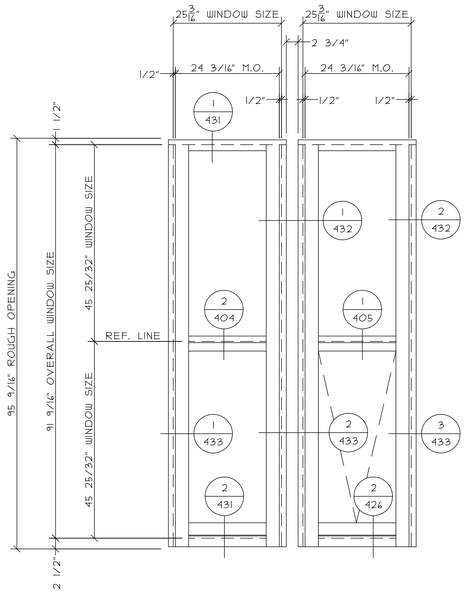

5

TYPE F2
1 TOTAL
WAUSAU 3250LP SERIES FRAMES
TYPE K GLAZING

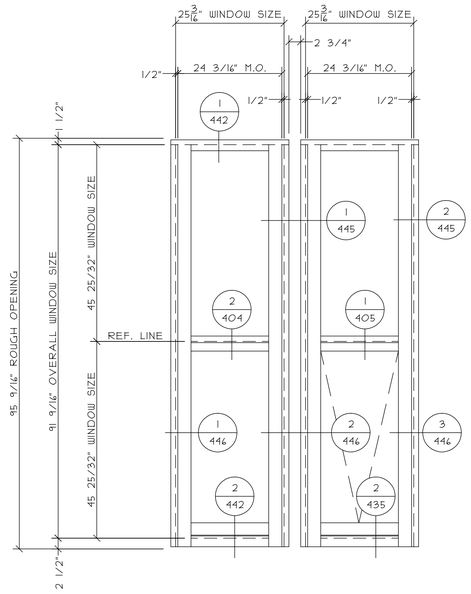

6

TYPE F3
1 TOTAL
WAUSAU 3250LP SERIES FRAMES
TYPE I GLAZING

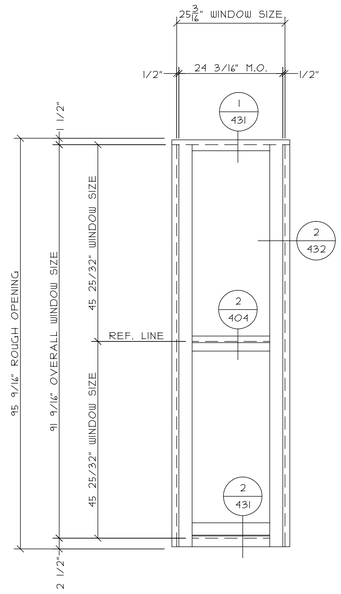

7

TYPE F4
2 TOTAL
WAUSAU 3250LP SERIES FRAMES
1 TOTAL TYPE I GLAZING
1 TOTAL TYPE K GLAZING

NO.	REVISION DESCRIPTION / ACTION TAKEN	BY	DATE

CONSTRUCTION MANAGER:

ARCHITECT INFO:

PROJECT INFO:

THIS DRAWING INCLUDING THE INFORMATION, DATA AND DESIGN IS CONFIDENTIAL AND THE PROPERTY OF AJAY GLASS CO. AND IS NOT TO BE REPRODUCED OR PUT TO OTHER USES OR DISCLOSED TO OTHERS WITHOUT THE WRITTEN PERMISSION OF AJAY GLASS CO.

TITLE
CURTAIN WALL ELEVATIONS

DRAWN BY / DATE
SAMPLE

CHECKED BY / DATE

AJAY PROJECT MANAGER:

SCALE:
3/4" = 1'-0"

AJAY PROJECT NO.:

DWG NO.:
305

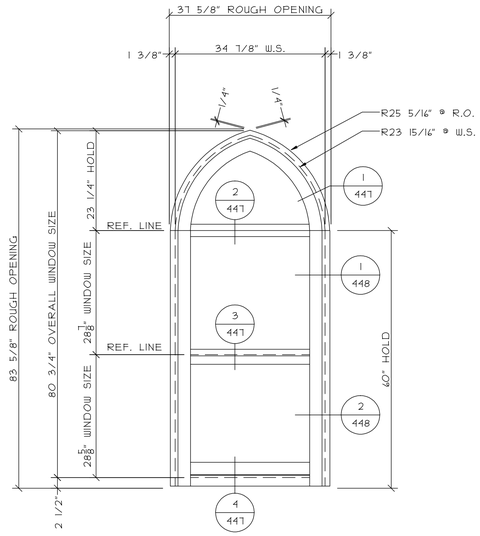

1

TYPE G
8 TOTAL
WAUSAU 3250LP SERIES FRAMES
2 TOTAL TYPE H GLAZING
6 TOTAL TYPE K GLAZING

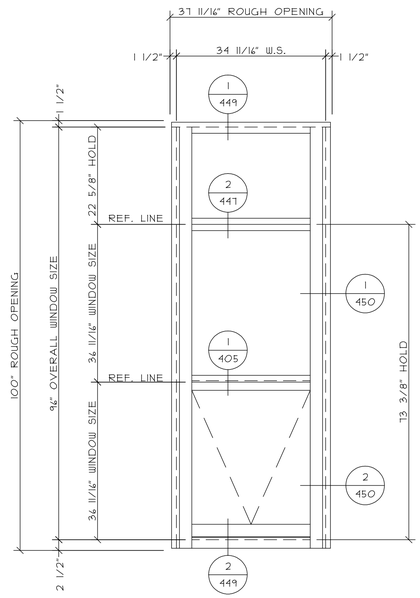

2

TYPE H
4 TOTAL
WAUSAU 3250LP SERIES FRAMES
1 TOTAL TYPE H GLAZING
3 TOTAL TYPE K GLAZING

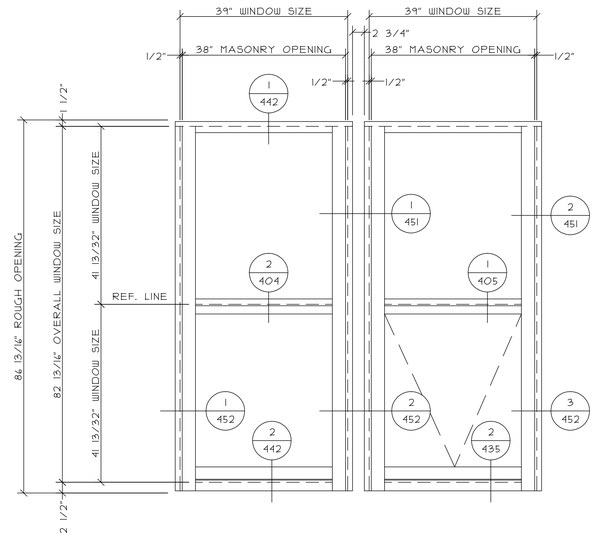

3

TYPE J
2 TOTAL
WAUSAU 3250LP SERIES FRAMES
TYPE K GLAZING

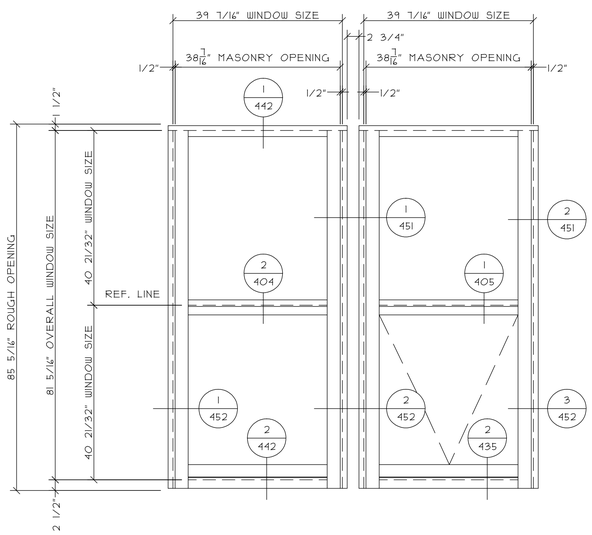

4

TYPE J1
3 TOTAL
WAUSAU 3250LP SERIES FRAMES
TYPE I GLAZING

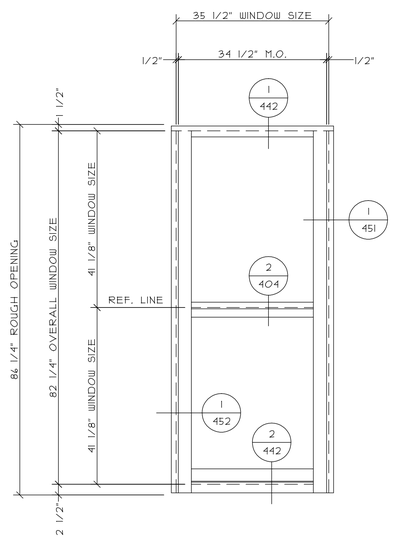

5

TYPE J2
4 TOTAL
WAUSAU 3250LP SERIES FRAMES
2 TOTAL TYPE I GLAZING
2 TOTAL TYPE K GLAZING

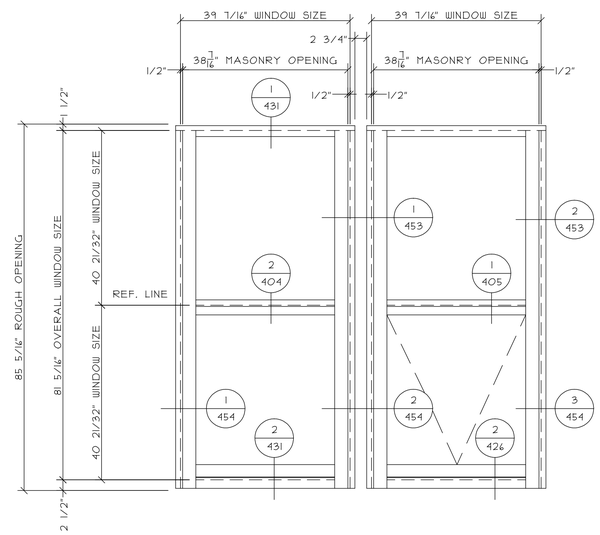

6

TYPE J3
9 TOTAL
WAUSAU 3250LP SERIES FRAMES
3 TOTAL TYPE I GLAZING
6 TOTAL TYPE K GLAZING

NO.	REVISION DESCRIPTION / ACTION TAKEN	BY	DATE

CONSTRUCTION MANAGER:

ARCHITECT INFO:

PROJECT INFO:

THIS DRAWING INCLUDING THE INFORMATION, DATA AND DESIGN IS CONFIDENTIAL AND THE PROPERTY OF AJAY GLASS CO. IT IS NOT TO BE COPIED, REPRODUCED OR ITS CONTENTS DIVULGED WITHOUT THE WRITTEN PERMISSION OF AJAY GLASS CO.

TITLE
CURTAIN WALL ELEVATIONS

DRAWN BY / DATE
SAMPLE

CHECKED BY / DATE

AJAY PROJECT MANAGER:

SCALE:
3/4" = 1'-0"

AJAY PROJECT NO.:

DWG NO.:
306

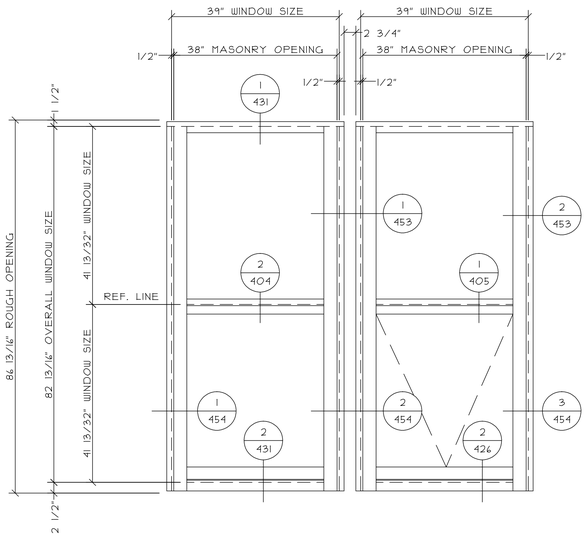

1

TYPE J4

1 TOTAL

WAUSAU 3250LP SERIES FRAMES

TYPE K GLAZING

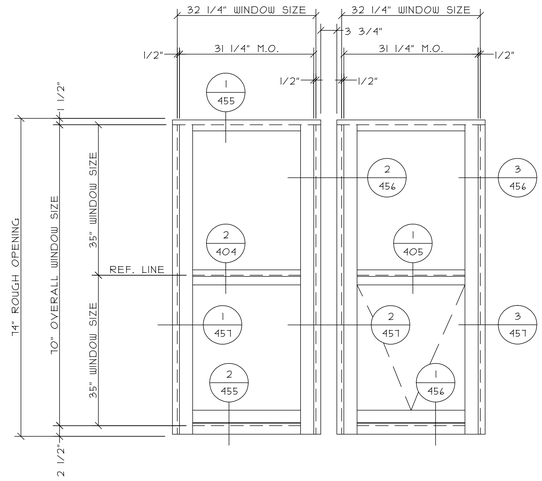

2

TYPE L

6 TOTAL

WAUSAU 3250LP SERIES FRAMES

2 TOTAL TYPE H GLAZING
4 TOTAL TYPE K GLAZING

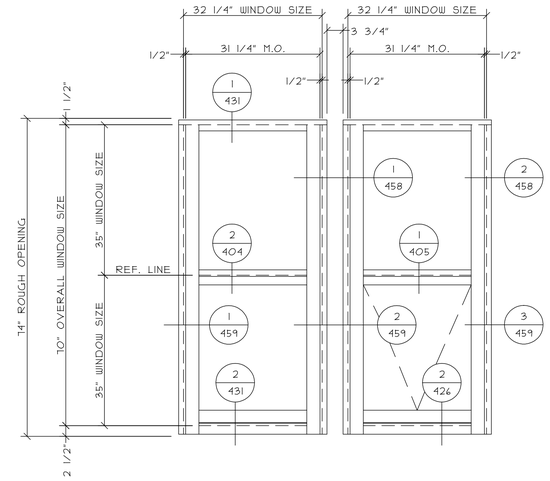

3

TYPE L1

1 TOTAL

WAUSAU 3250LP SERIES FRAMES

TYPE H GLAZING

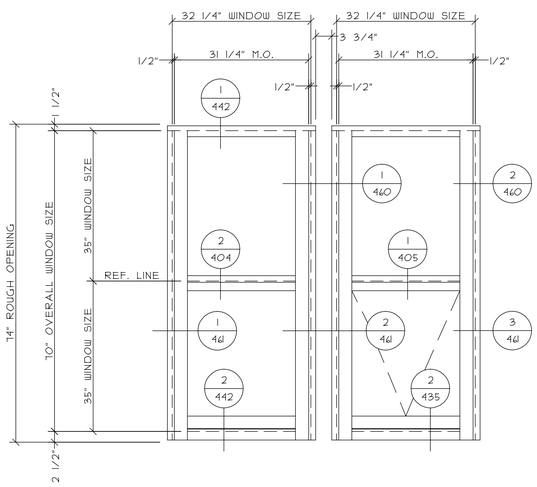

4

TYPE L2

1 TOTAL

WAUSAU 3250LP SERIES FRAMES

TYPE H GLAZING

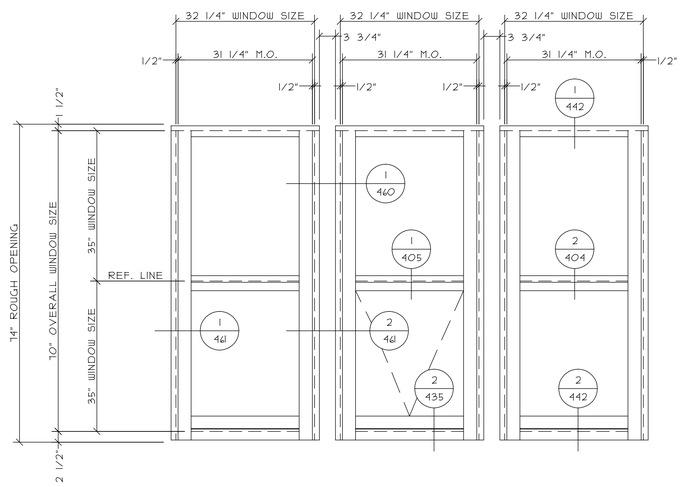

5

TYPE L3

1 TOTAL

WAUSAU 3250LP SERIES FRAMES

TYPE H GLAZING

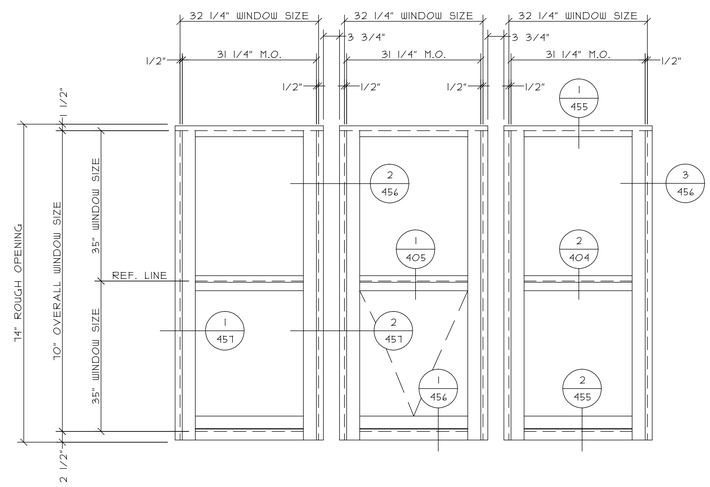

6

TYPE L4

1 TOTAL

WAUSAU 3250LP SERIES FRAMES

TYPE K GLAZING

NO.	REVISION DESCRIPTION / ACTION TAKEN	BY	DATE

CONSTRUCTION MANAGER:

ARCHITECT INFO:

PROJECT INFO:

THIS DRAWING INCLUDING THE INFORMATION, DATA AND DESIGN IS CONFIDENTIAL AND THE PROPERTY OF AJAY GLASS CO. IT IS NOT TO BE REPRODUCED OR THE CONTENTS DIVULGED WITHOUT THE WRITTEN PERMISSION OF AJAY GLASS CO.

TITLE

CURTAIN WALL ELEVATIONS

DRAWN BY / DATE

SAMPLE

CHECKED BY / DATE

AJAY PROJECT MANAGER:

SCALE:

3/4" = 1'-0"

AJAY PROJECT NO.:

DWG NO.:

307

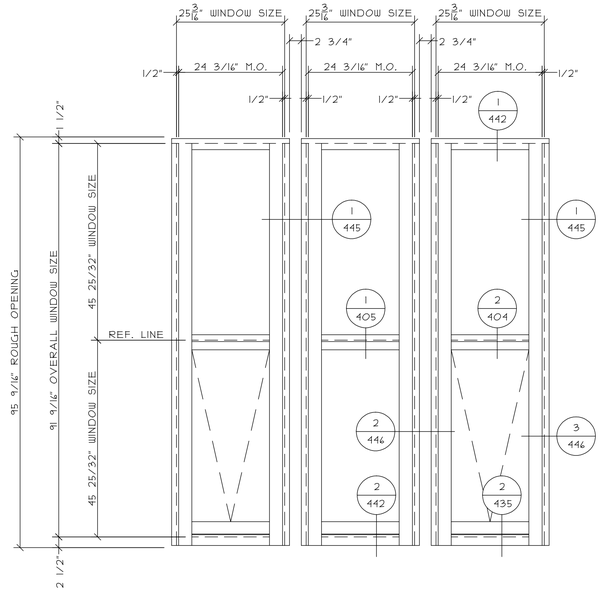

1

TYPE F1-2
1 TOTAL
WAUSAU 3250LP SERIES FRAMES
TYPE 1 GLAZING

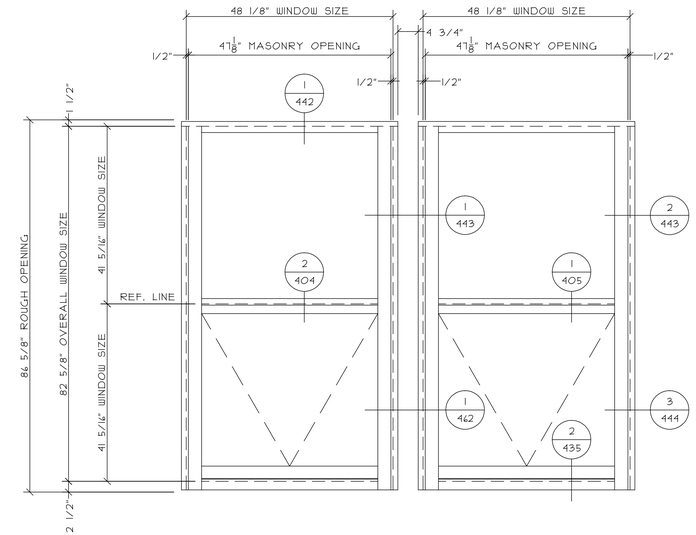

2

TYPE E6-2
1 TOTAL
WAUSAU 3250LP SERIES FRAMES
TYPE H GLAZING

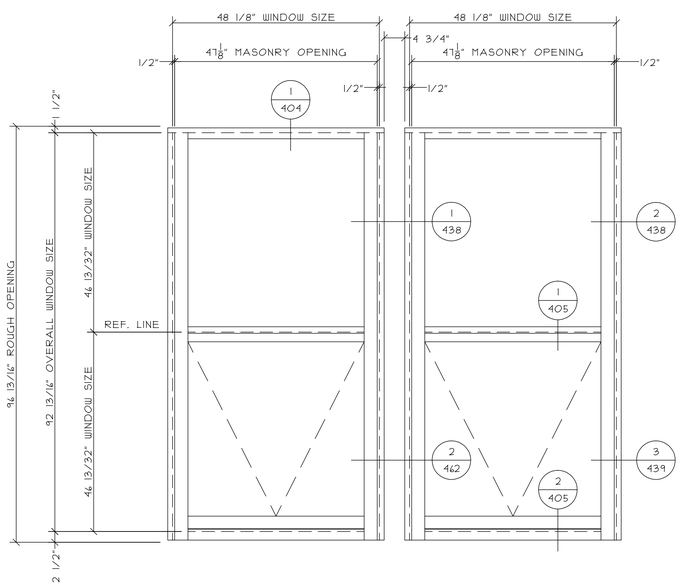

3

TYPE E1-2
2 TOTAL
WAUSAU 3250LP SERIES FRAMES
TYPE H GLAZING

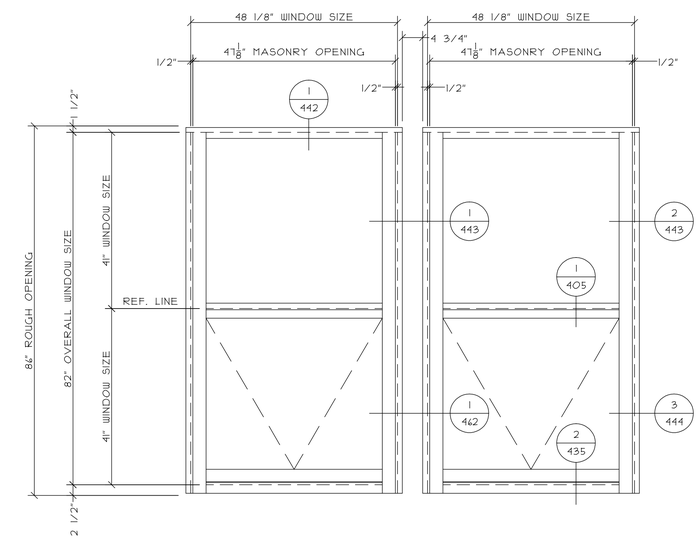

4

TYPE E2-2
1 TOTAL
WAUSAU 3250LP SERIES FRAMES
TYPE H GLAZING

NO.	REVISION DESCRIPTION / ACTION TAKEN	BY	DATE

CONSTRUCTION MANAGER:

ARCHITECT INFO:

PROJECT INFO:

THIS DRAWING INCLUDING THE INFORMATION, DATA AND DESIGN IS CONFIDENTIAL AND THE PROPERTY OF AJAY GLASS CO. IT SHALL NOT BE COPIED, REPRODUCED OR ITS CONTENTS DIVULGED WITHOUT THE WRITTEN PERMISSION OF AJAY GLASS CO.

TITLE
CURTAIN WALL ELEVATIONS

DRAWN BY / DATE
SAMPLE

CHECKED BY / DATE

AJAY PROJECT MANAGER:

SCALE:
3/4" = 1'-0"

AJAY PROJECT NO.:

DWG NO.:
308

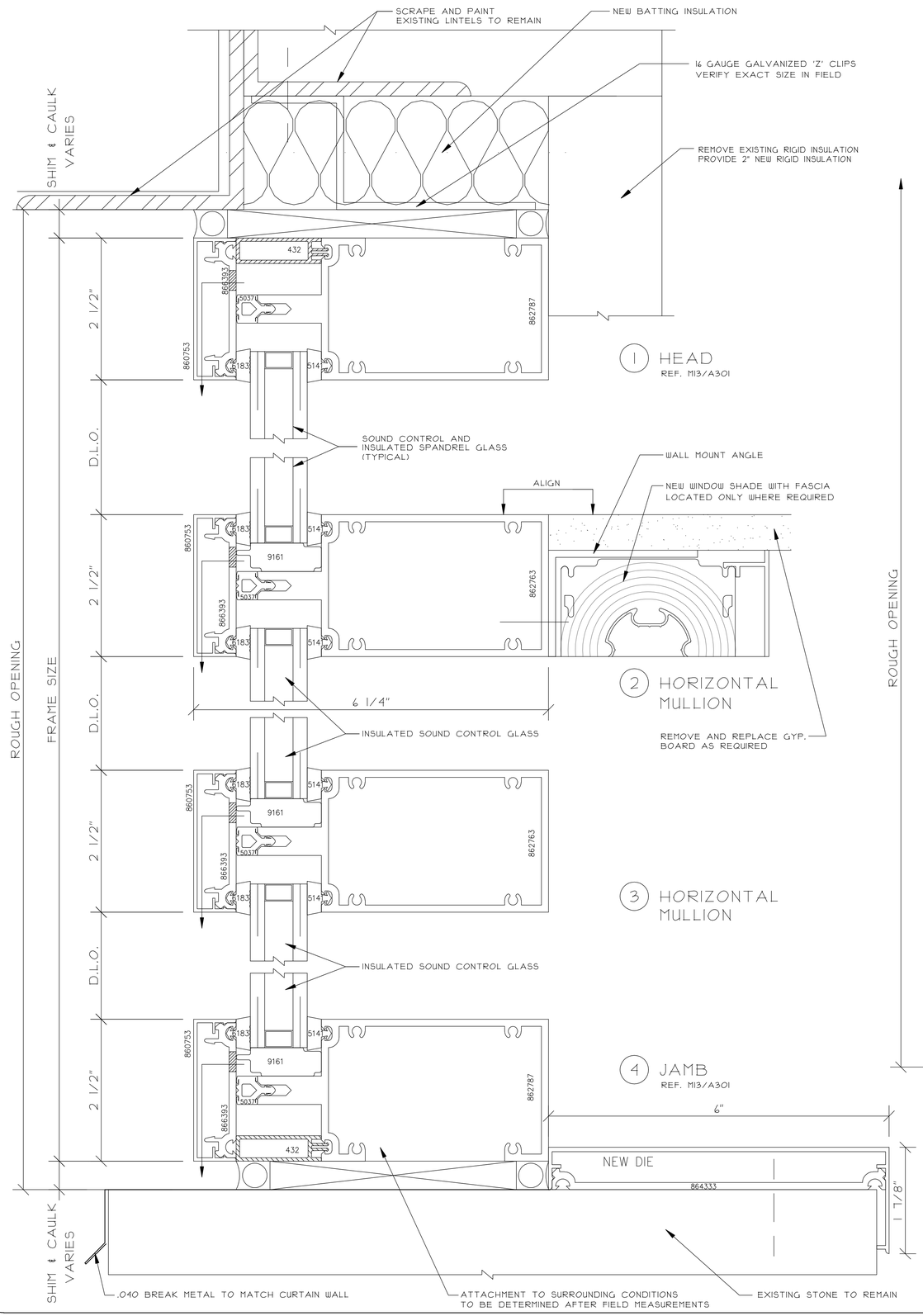

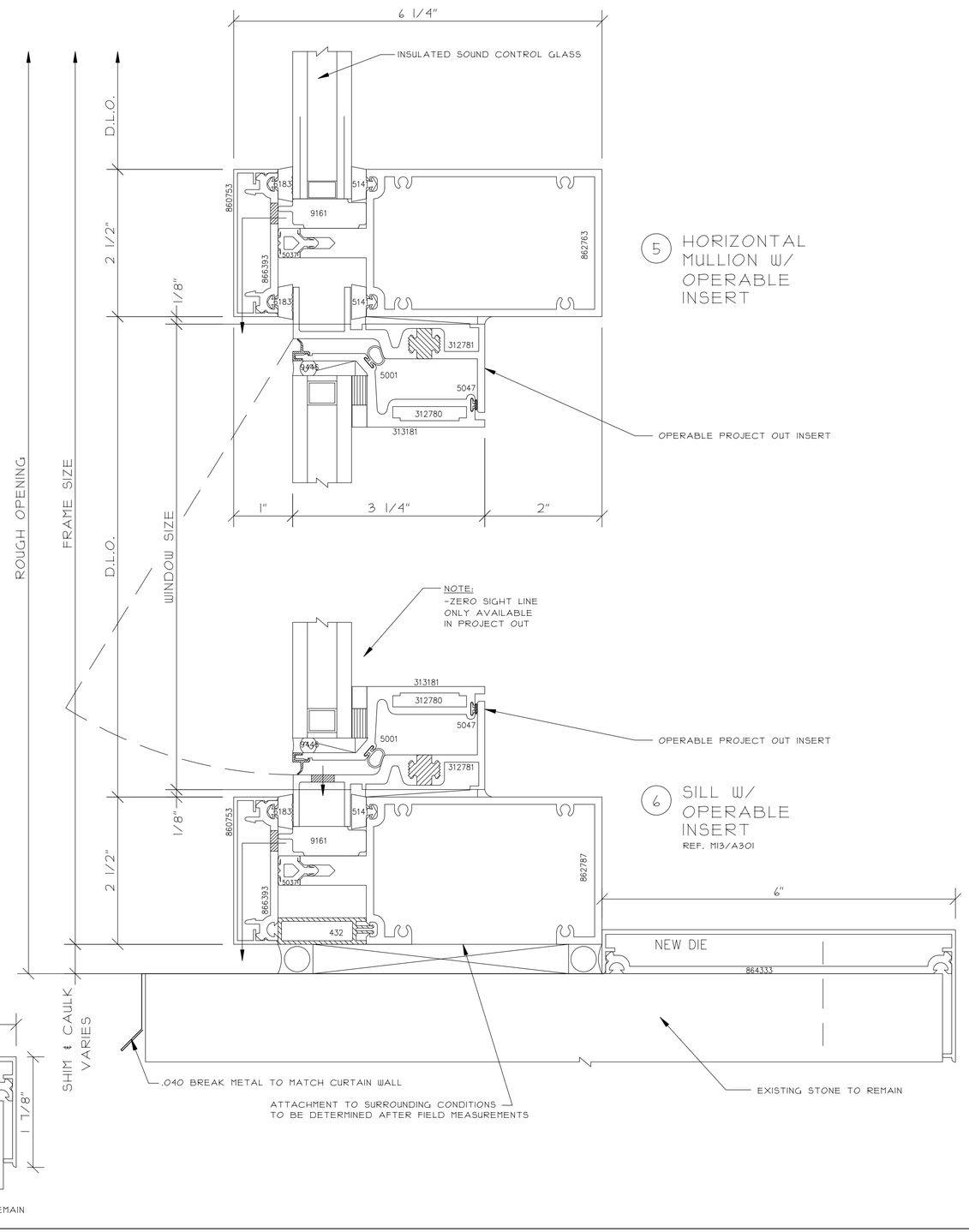

NO.	REVISION DESCRIPTION / ACTION TAKEN	BY	DATE

CONSTRUCTION MANAGER:

ARCHITECT INFO:

PROJECT INFO:

THIS DRAWING INCLUDING THE INFORMATION, DATA AND DESIGN IS CONFIDENTIAL AND THE PROPERTY OF AJAY GLASS CO. IT IS NOT TO BE REPRODUCED OR ITS CONTENTS DIVULGED WITHOUT THE WRITTEN PERMISSION OF AJAY GLASS CO.

TITLE: WINDOW WALL DETAILS

DRAWN BY / DATE: SAMPLE

CHECKED BY / DATE:

AJAY PROJECT MANAGER:

SCALE: 12" = 1'-0"

AJAY PROJECT NO.:

DWG NO.: 400

1 VERTICAL MULLION

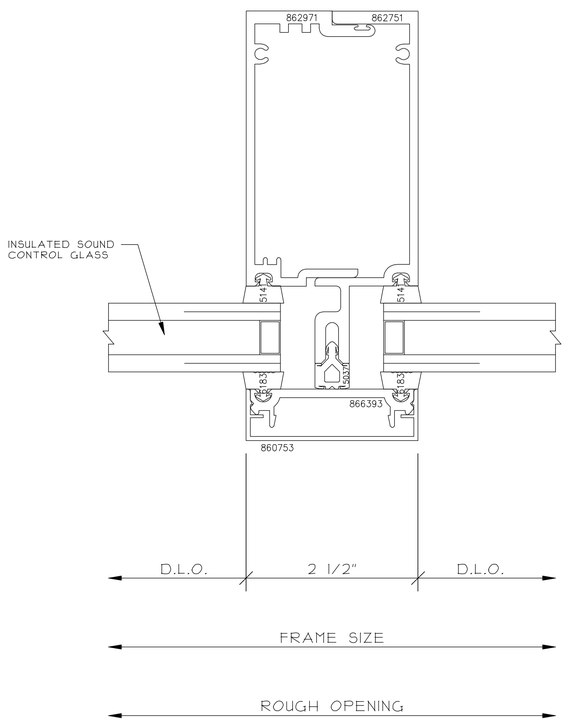

2 VERTICAL MULLION

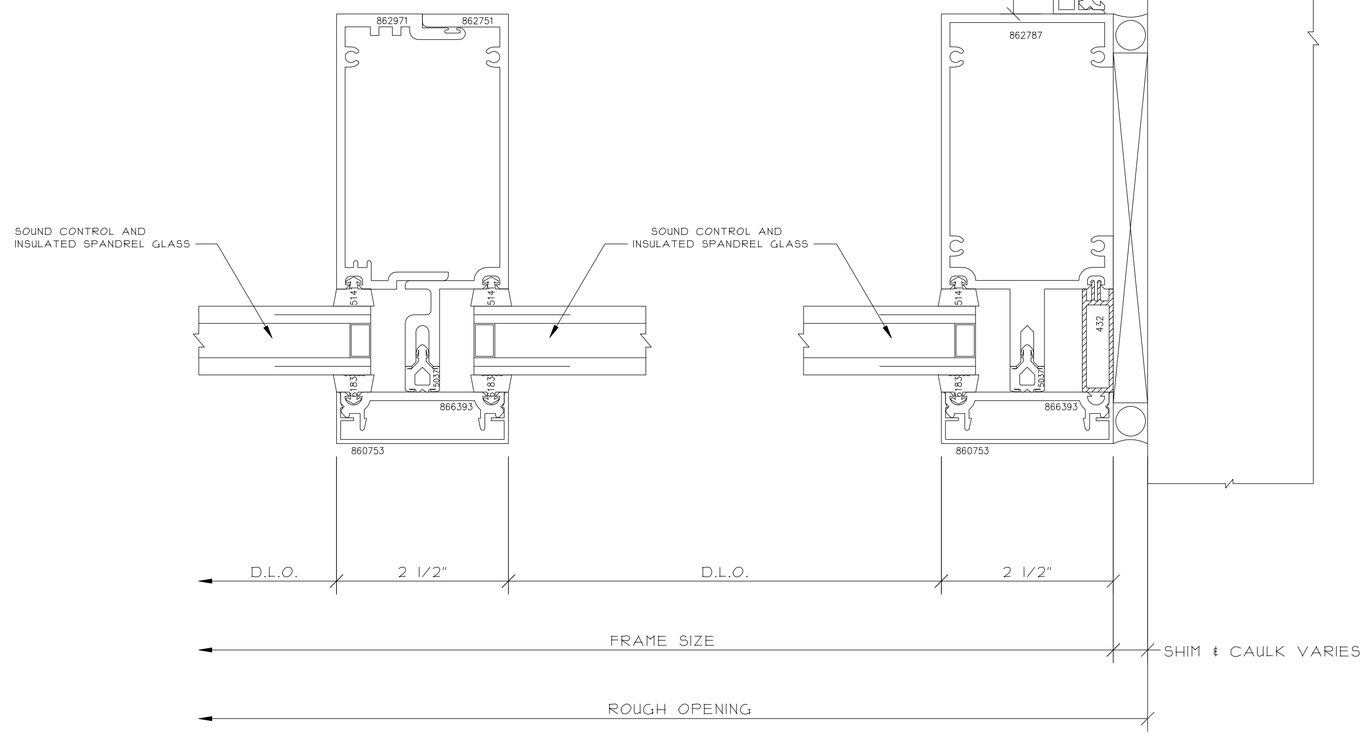

3 JAMB
REF. F10/A301

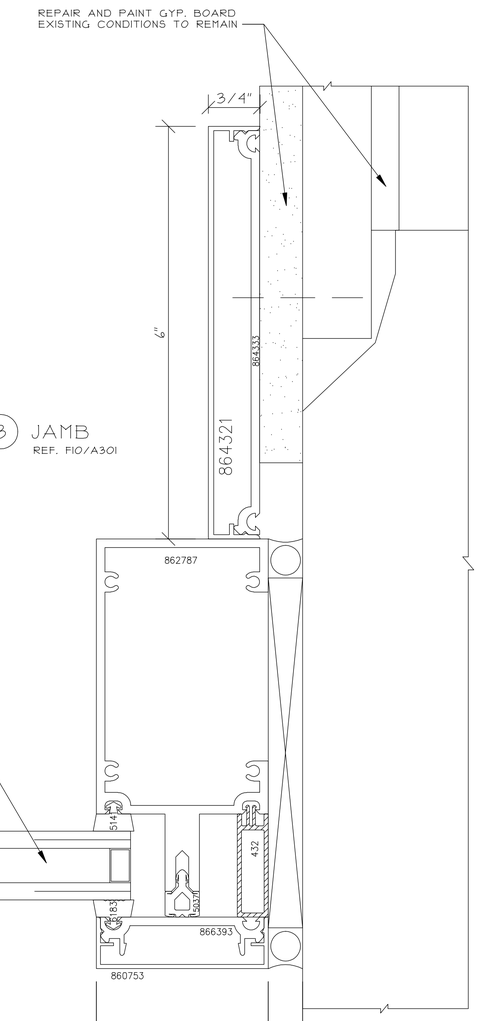

NO.	REVISION DESCRIPTION / ACTION TAKEN	BY	DATE

CONSTRUCTION MANAGER:

ARCHITECT INFO:

PROJECT INFO:

THIS DRAWING, INCLUDING THE INFORMATION, DATA, AND DESIGN IS CONFIDENTIAL AND THE PROPERTY OF AJAY GLASS CO. IT SHALL NOT BE COPIED, REPRODUCED OR ITS CONTENTS DIVULGED WITHOUT THE WRITTEN PERMISSION OF AJAY GLASS CO.

TITLE
WINDOW WALL DETAILS

DRAWN BY / DATE
SAMPLE

CHECKED BY / DATE

AJAY PROJECT MANAGER:

SCALE:
12" = 1'-0"

AJAY PROJECT NO.:

DWG NO.:
401

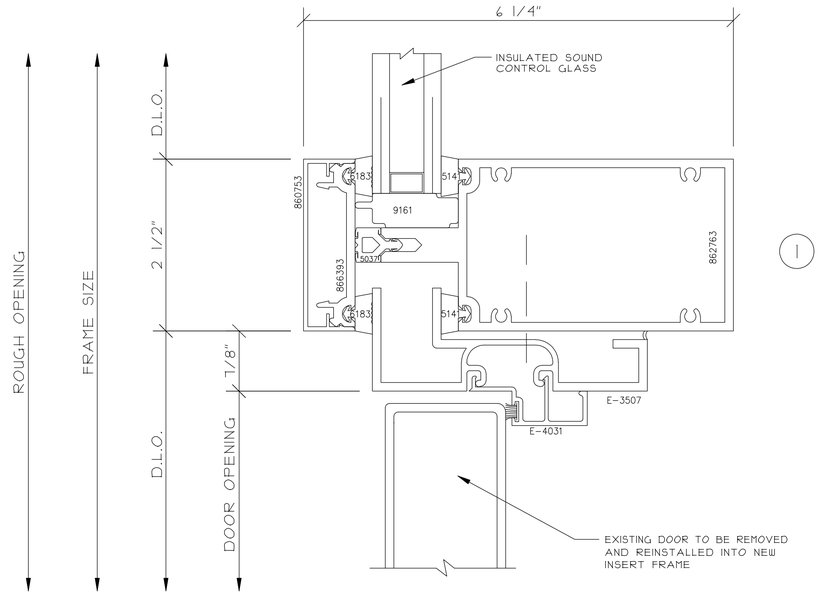

1 HORIZONTAL MULLION W/ INSERT FRAME CLIP
REF. D13/A301

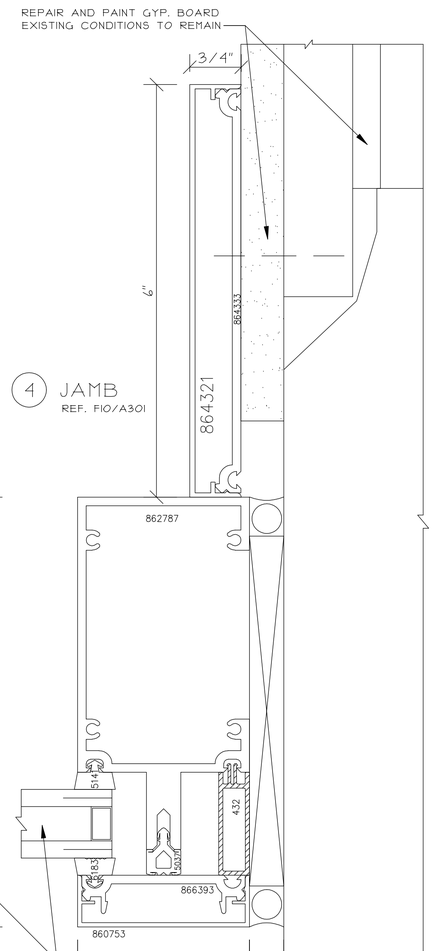

4 JAMB
REF. F10/A301

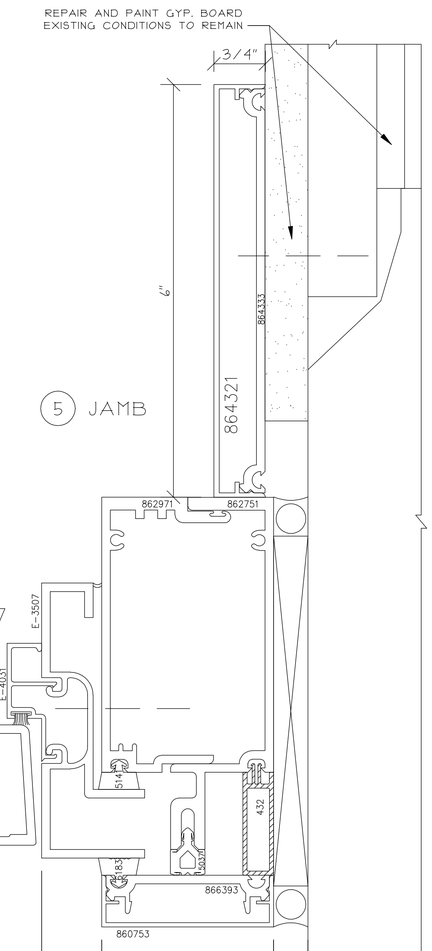

5 JAMB

2 OPERABLE VERTICAL MULLION W/ INSERT FRAME CLIP

3 OPERABLE VERTICAL MULLION

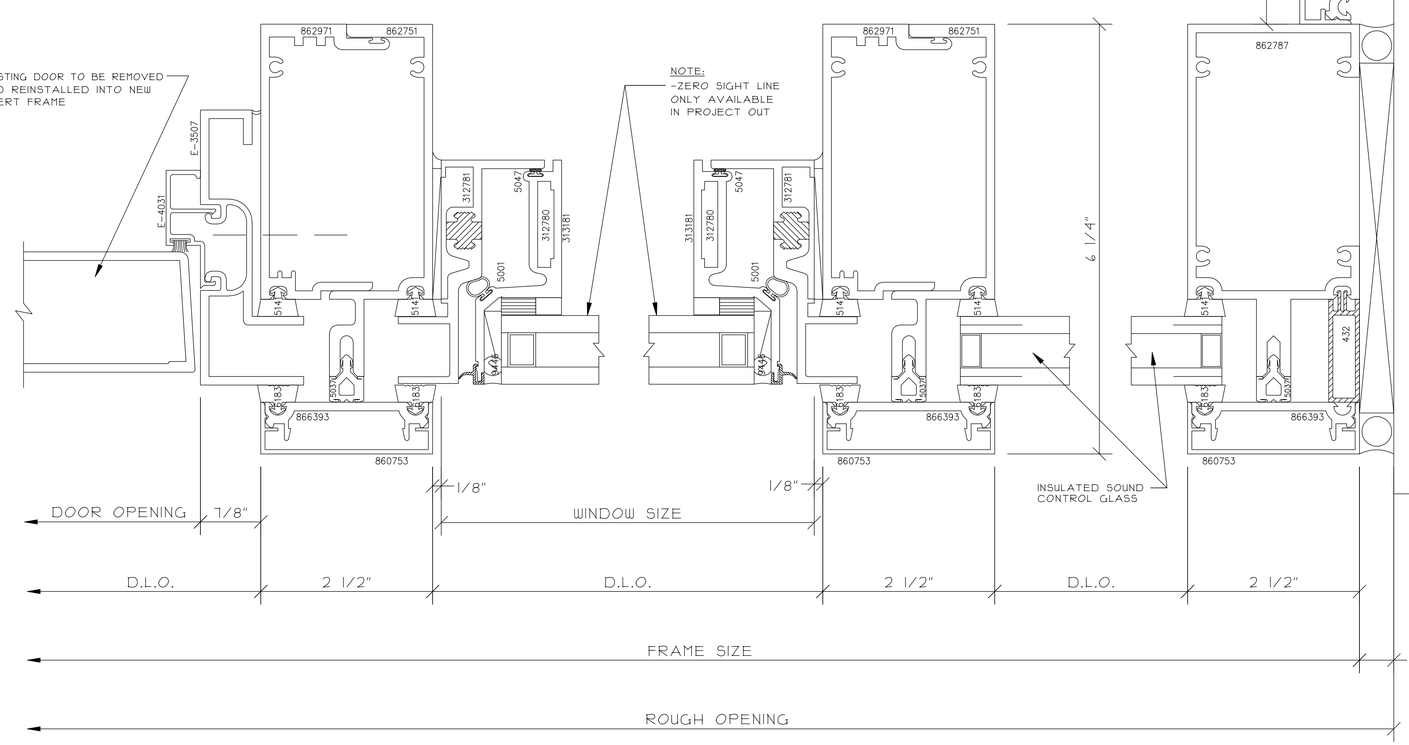

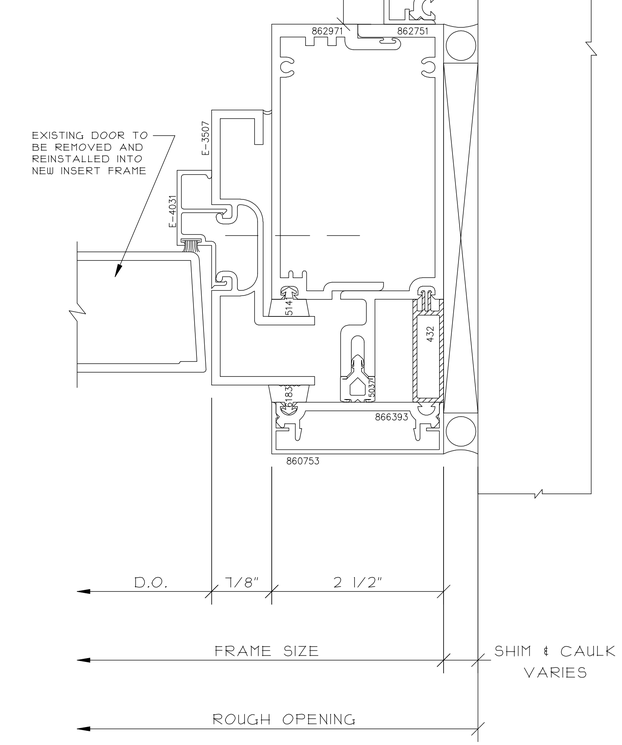

NO.	REVISION DESCRIPTION / ACTION TAKEN	BY	DATE

CONSTRUCTION MANAGER:

ARCHITECT INFO:

PROJECT INFO:

THIS DRAWING INCLUDING THE INFORMATION, DATA, AND DESIGN IS CONFIDENTIAL AND THE PROPERTY OF AJAX GLASS. IT SHALL NOT BE COPIED, REPRODUCED OR ITS CONTENTS DIVULGED WITHOUT THE WRITTEN PERMISSION OF AJAX GLASS CO.

TITLE: WINDOW WALL DETAILS

DRAWN BY / DATE: SAMPLE

CHECKED BY / DATE:

AJAX PROJECT MANAGER:

SCALE: 12" = 1'-0"

AJAX PROJECT NO.:

DWG NO.: 402

1 TYPICAL JAMB "F" ANCHOR

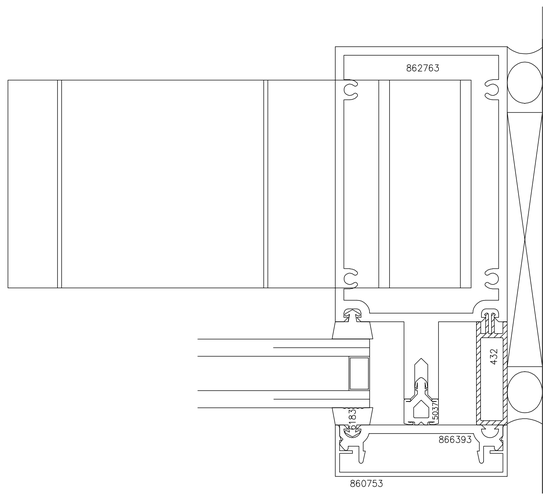

2 TYPICAL INTERMEDIATE "T" ANCHOR

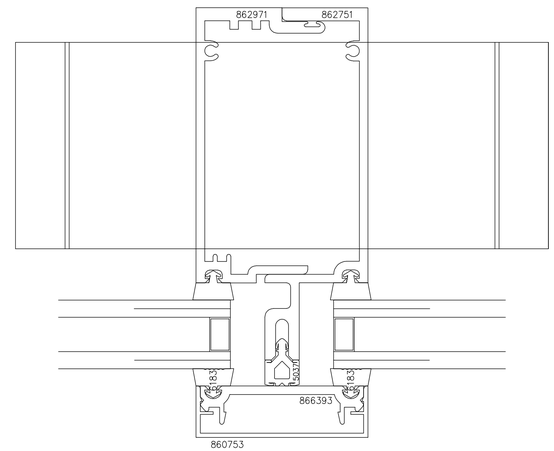

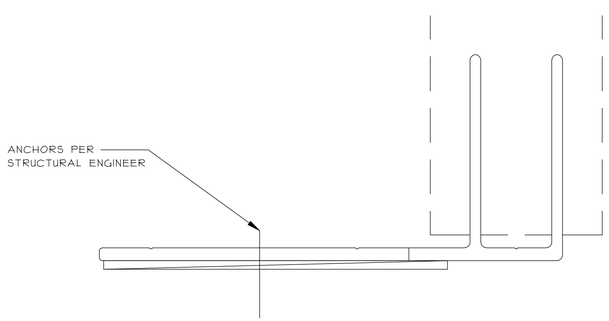

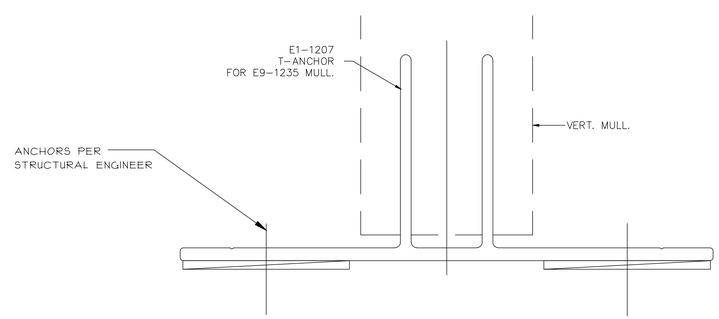

NO.	REVISION DESCRIPTION / ACTION TAKEN	BY	DATE

CONSTRUCTION MANAGER:

ARCHITECT INFO:

PROJECT INFO:

THIS DRAWING INCLUDING THE INFORMATION, DATA AND DESIGN IS CONFIDENTIAL AND THE PROPERTY OF AJAY GLASS CO. IT'S NOT TO BE COPIED, REPRODUCED OR ITS CONTENTS DIVULGED WITHOUT THE WRITTEN PERMISSION OF AJAY GLASS CO.

TITLE
WINDOW WALL DETAILS

DRAWN BY / DATE
SAMPLE

CHECKED BY / DATE

AJAY PROJECT MANAGER:

SCALE:
12" = 1'-0"

AJAY PROJECT NO.:

DWG NO.:
403

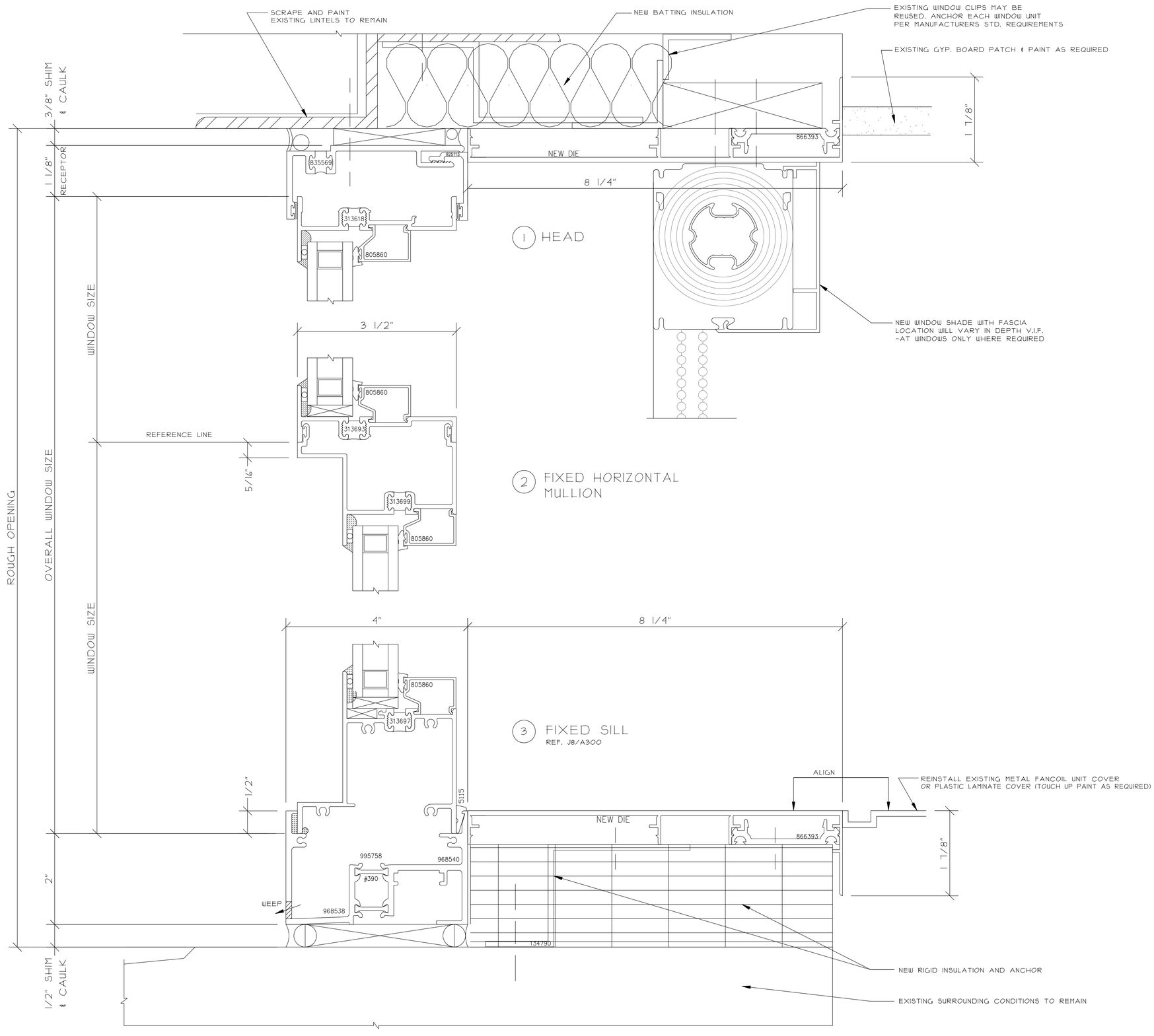

NO.	REVISION DESCRIPTION / ACTION TAKEN	BY	DATE

CONSTRUCTION MANAGER:

ARCHITECT INFO:

PROJECT INFO:

THIS DRAWING, INCLUDING THE INFORMATION, DATA, AND DESIGN IS CONFIDENTIAL AND THE PROPERTY OF AJAY GLASS CO. IT MAY NOT BE COPIED, REPRODUCED OR ITS CONTENTS DIVULGED WITHOUT THE WRITTEN PERMISSION OF AJAY GLASS CO.

TITLE
WINDOW WALL DETAILS

DRAWN BY / DATE
SAMPLE

CHECKED BY / DATE

AJAY PROJECT MANAGER:

SCALE:
12" = 1'-0"

AJAY PROJECT NO.:

DWG NO.:
404

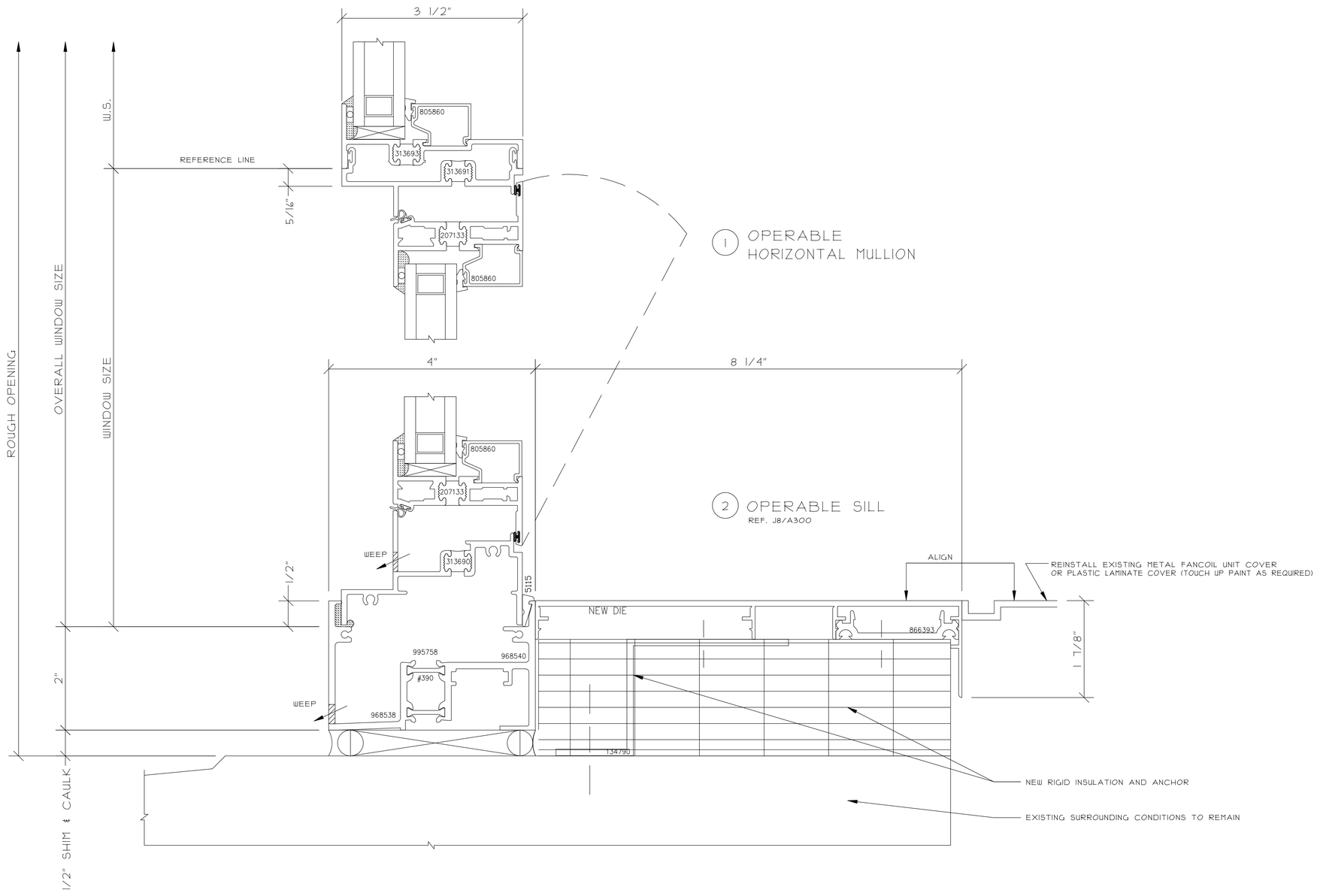

NO.	REVISION DESCRIPTION / ACTION TAKEN	BY	DATE

CONSTRUCTION MANAGER:

ARCHITECT INFO:

PROJECT INFO:

THIS DRAWING INCLUDING THE INFORMATION, DATA, AND DESIGN IS CONFIDENTIAL AND THE PROPERTY OF AJAY GLASS CO. IT SHALL NOT BE COPIED, REPRODUCED OR ITS CONTENTS DIVULGED WITHOUT THE WRITTEN PERMISSION OF AJAY GLASS CO.

TITLE
WINDOW WALL DETAILS

DRAWN BY / DATE
SAMPLE

CHECKED BY / DATE

AJAY PROJECT MANAGER:

SCALE:
12" = 1'-0"

AJAY PROJECT NO.:

DWG NO.:
405

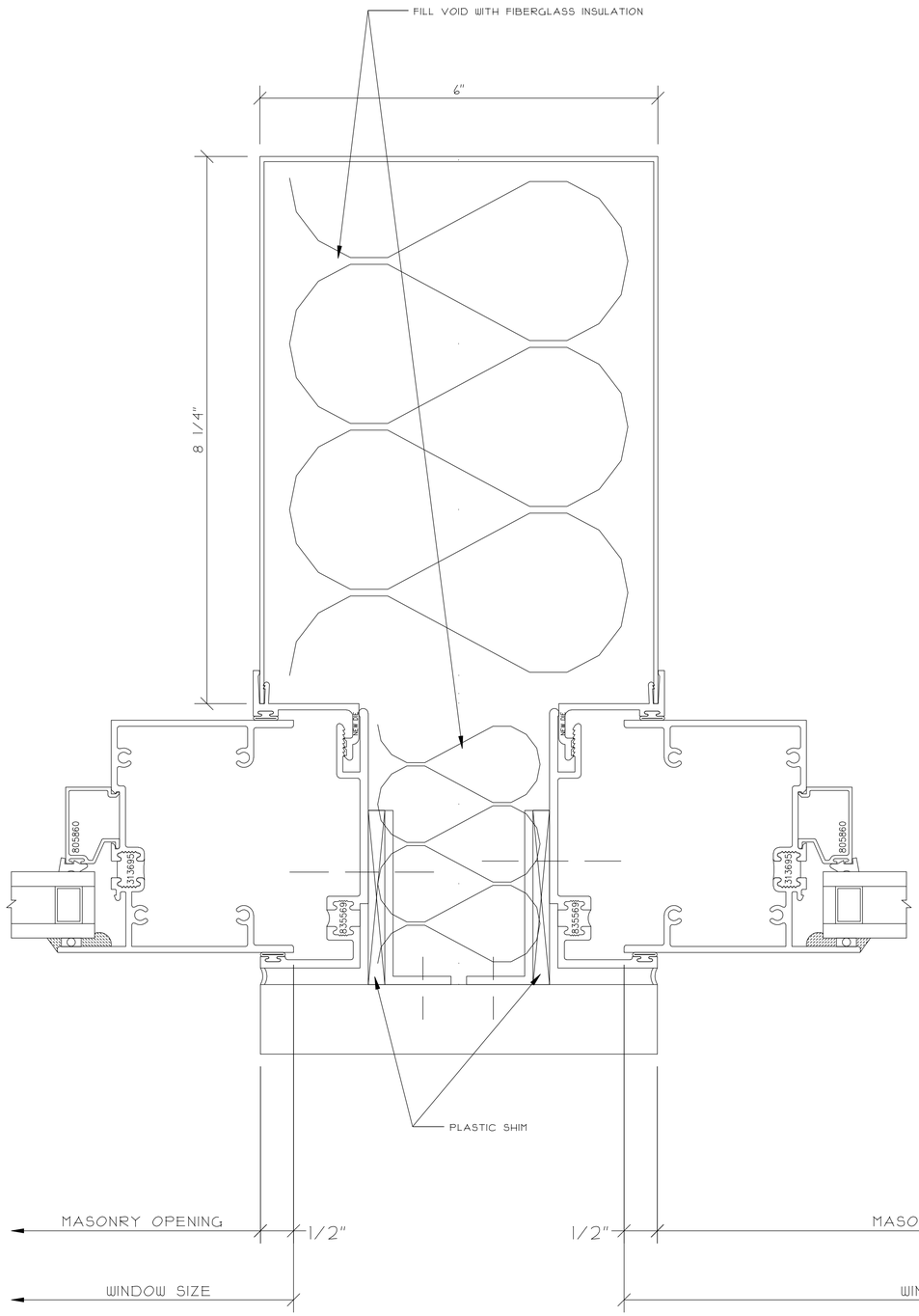

1 FIXED UPPER COLUMN JAMB

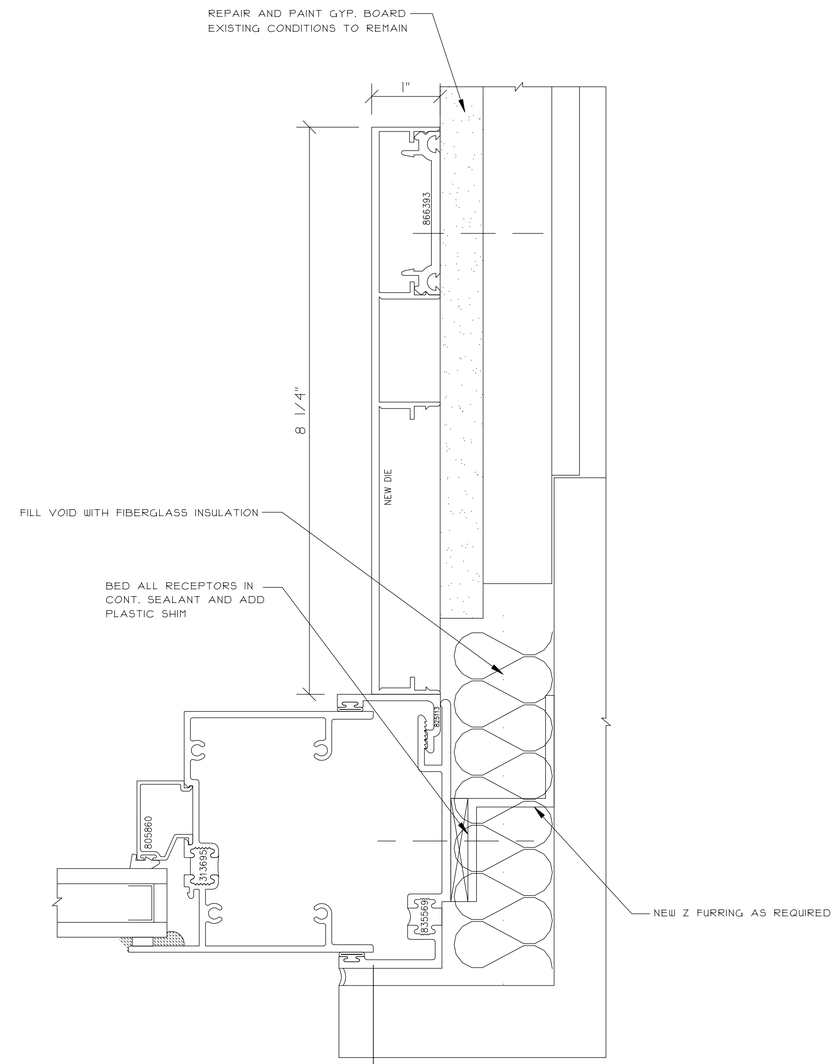

2 FIXED UPPER JAMB
REF. C8/A300

NO.	REVISION DESCRIPTION / ACTION TAKEN	BY	DATE

CONSTRUCTION MANAGER:

ARCHITECT INFO:

PROJECT INFO:

THIS DRAWING, INCLUDING THE INFORMATION, DATA, AND DESIGN IS CONFIDENTIAL AND THE PROPERTY OF AJAY GLASS CO. IT MUST NOT BE COPIED, REPRODUCED OR ITS CONTENTS DIVULGED WITHOUT THE WRITTEN PERMISSION OF AJAY GLASS CO.

TITLE
WINDOW WALL DETAILS

DRAWN BY / DATE
SAMPLE

CHECKED BY / DATE

AJAY PROJECT MANAGER:

SCALE:
12" = 1'-0"

AJAY PROJECT NO.:

DWG NO.:
406

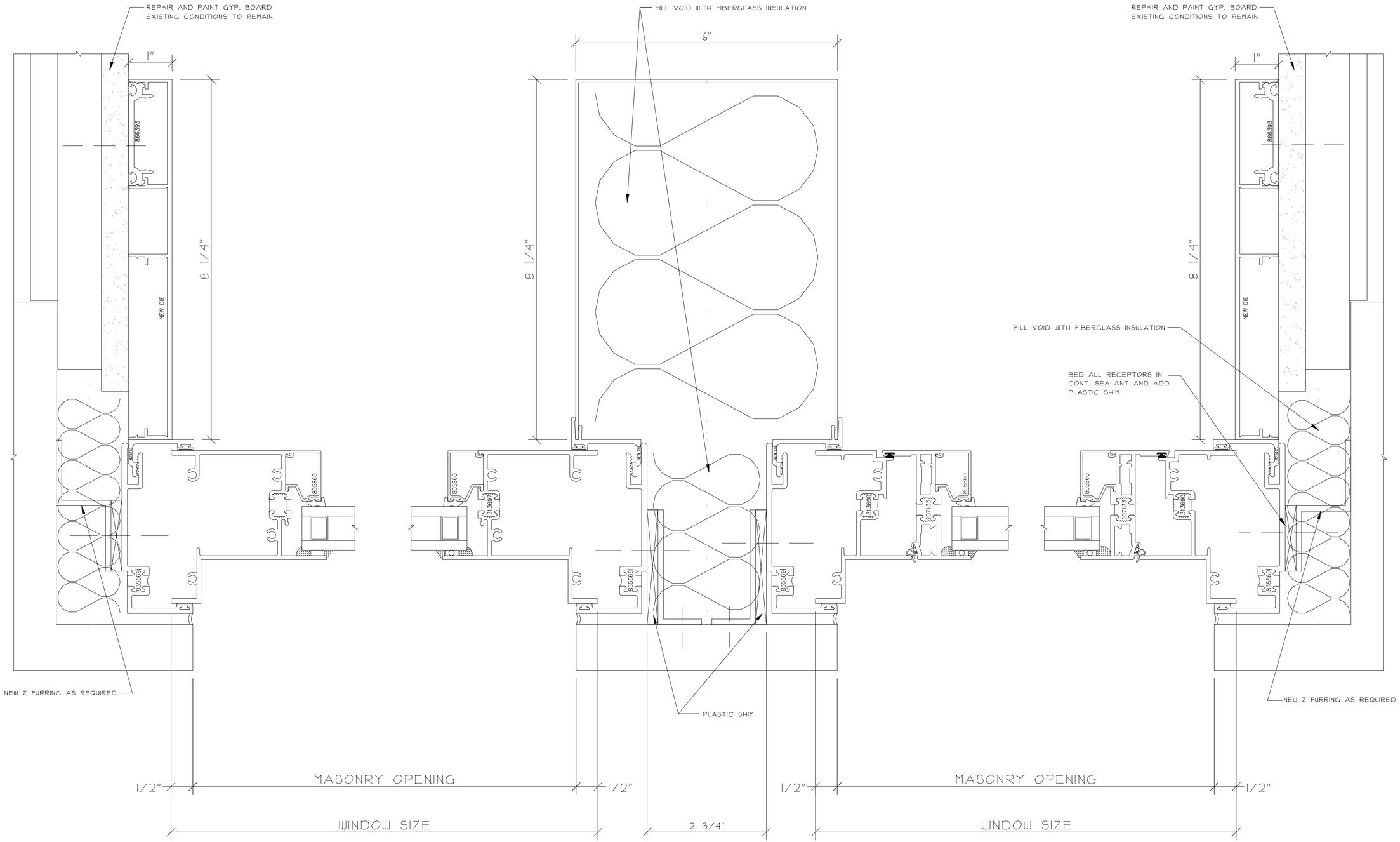

1 FIXED LOWER JAMB

2 FIXED/OPERABLE LOWER COLUMN JAMB
REF. C10/A300

3 OPERABLE JAMB
REF. C12/A300

NO.	REVISION DESCRIPTION / ACTION TAKEN	BY	DATE

CONSTRUCTION MANAGER:

ARCHITECT INFO:

PROJECT INFO:

THIS DRAWING INCLUDING THE INFORMATION, DATA AND DESIGN IS CONFIDENTIAL AND THE PROPERTY OF AJAY GLASS CO. AND MUST BE RETURNED UPON REQUEST. ITS CONTENTS DIVULGED WITHOUT THE WRITTEN PERMISSION OF AJAY GLASS CO.

TITLE
WINDOW WALL DETAILS

DRAWN BY / DATE
SAMPLE

CHECKED BY / DATE

AJAY PROJECT MANAGER:

SCALE:
12" = 1'-0"

AJAY PROJECT NO.:

DWG NO.:
407

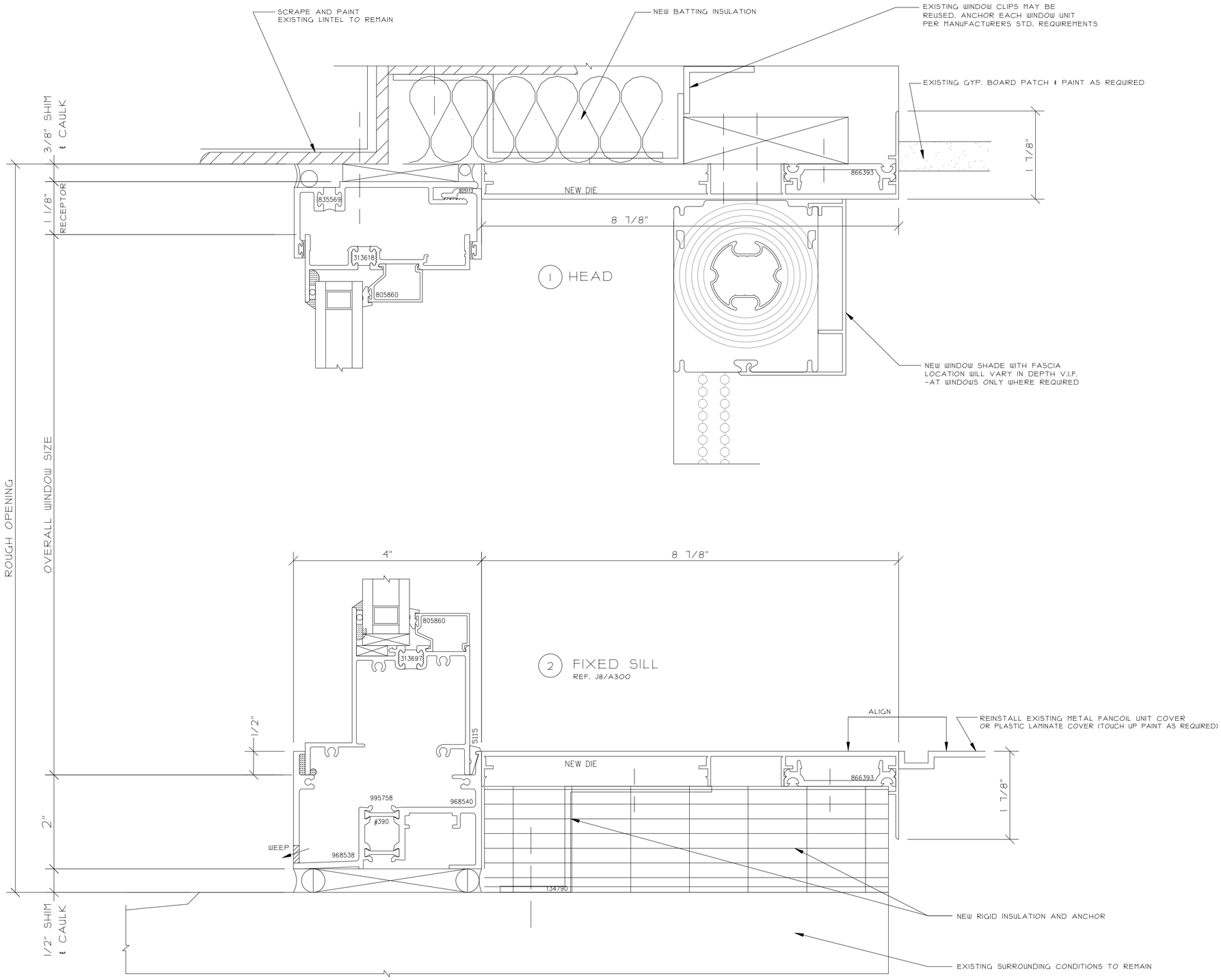

NO.	REVISION DESCRIPTION / ACTION TAKEN	BY	DATE

CONSTRUCTION MANAGER:

ARCHITECT INFO:

PROJECT INFO:

THIS DRAWING INCLUDING THE INFORMATION, DATA AND DESIGN IS CONFIDENTIAL AND THE PROPERTY OF AJAY GLASS CO. IT IS NOT TO BE COPIED, REPRODUCED OR ITS CONTENTS DIVULGED WITHOUT THE WRITTEN PERMISSION OF AJAY GLASS CO.

TITLE
WINDOW WALL DETAILS

DRAWN BY / DATE
SAMPLE

CHECKED BY / DATE

AJAY PROJECT MANAGER:

SCALE:
12" = 1'-0"

AJAY PROJECT NO.:

DWG NO.:
408

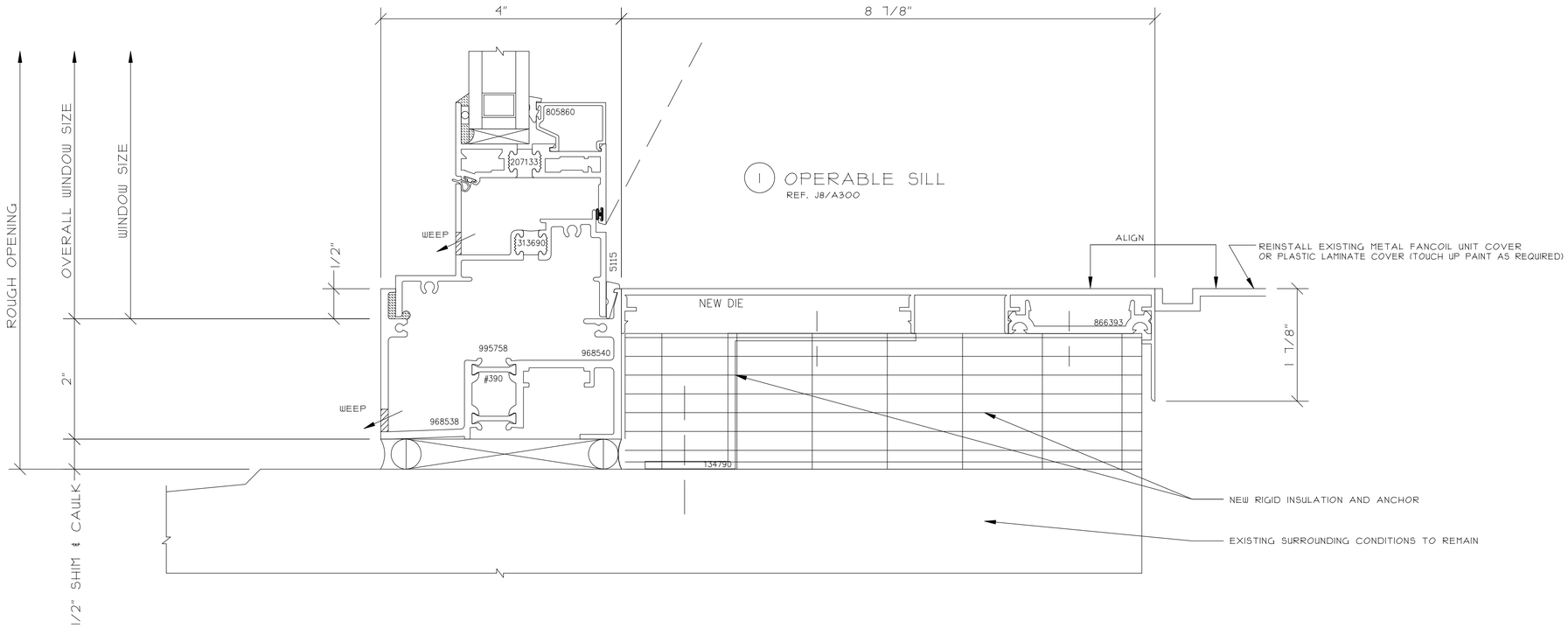

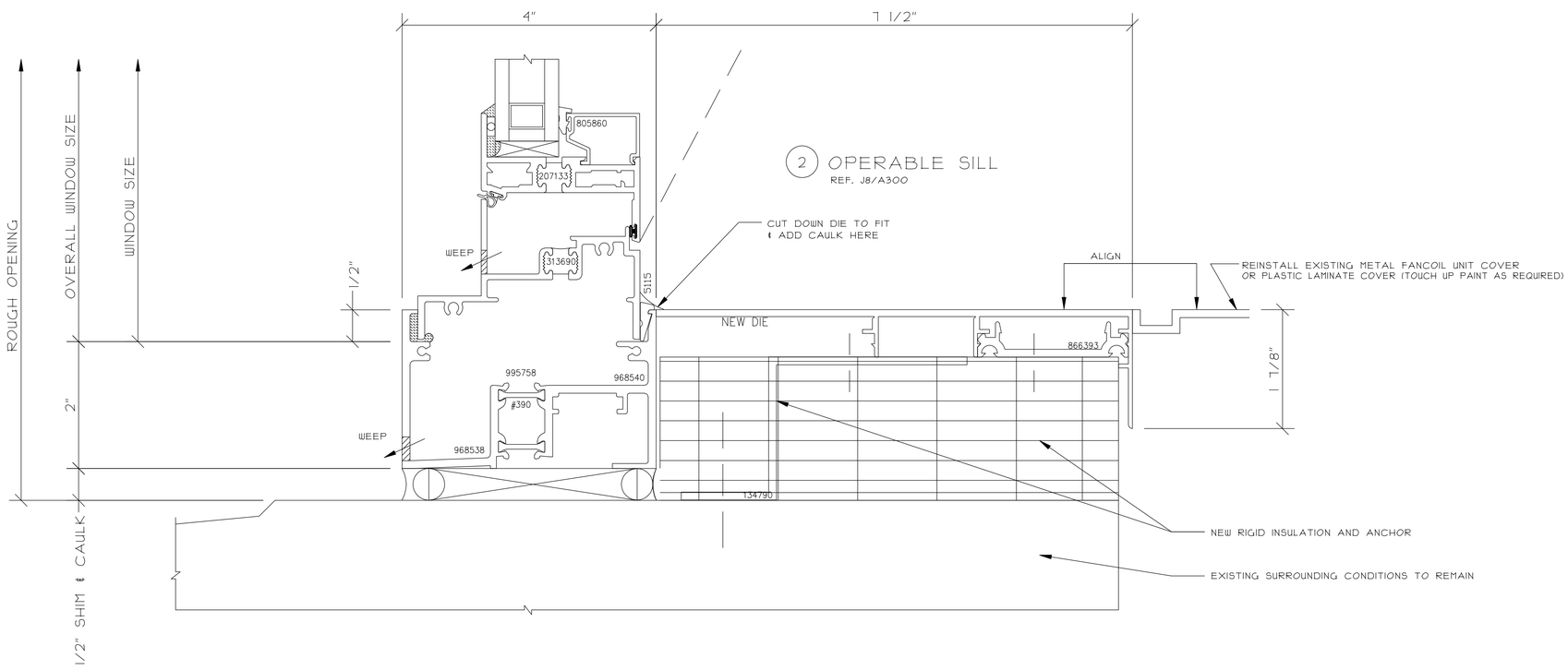

NO.	REVISION DESCRIPTION / ACTION TAKEN	BY	DATE

CONSTRUCTION MANAGER:

ARCHITECT INFO:

PROJECT INFO:

THIS DRAWING INCLUDING THE INFORMATION, DATA AND DESIGN IS CONFIDENTIAL AND THE PROPERTY OF AJAY GLASS & MIRROR CO. INC. AND CANNOT BE REPRODUCED OR ITS CONTENTS DIVULGED WITHOUT THE WRITTEN PERMISSION OF AJAY GLASS CO.

TITLE
WINDOW WALL DETAILS

DRAWN BY / DATE
SAMPLE

CHECKED BY / DATE

AJAY PROJECT MANAGER:

SCALE:
12" = 1'-0"

AJAY PROJECT NO.:

DWG NO.:
409

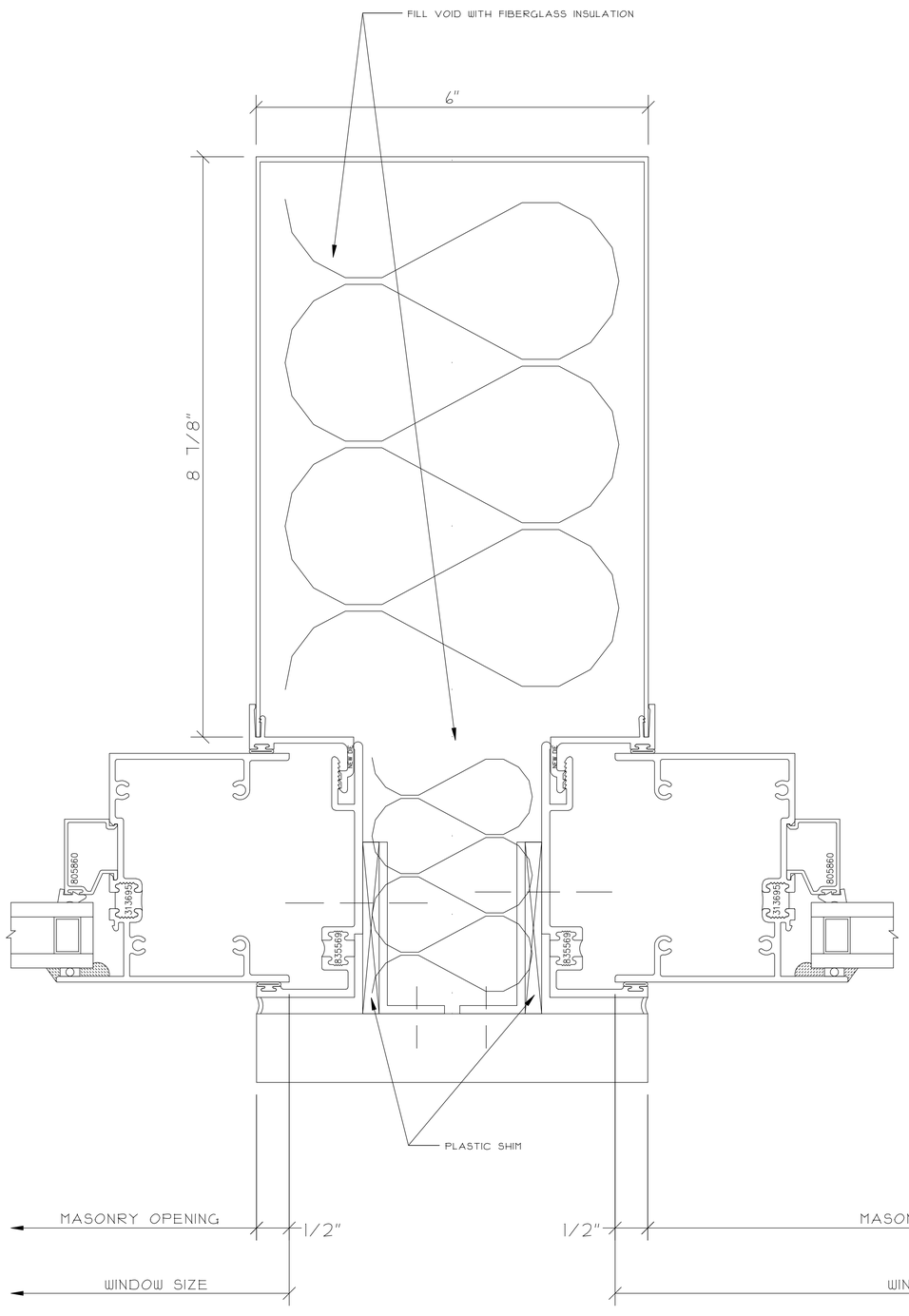

1 FIXED UPPER COLUMN JAMB

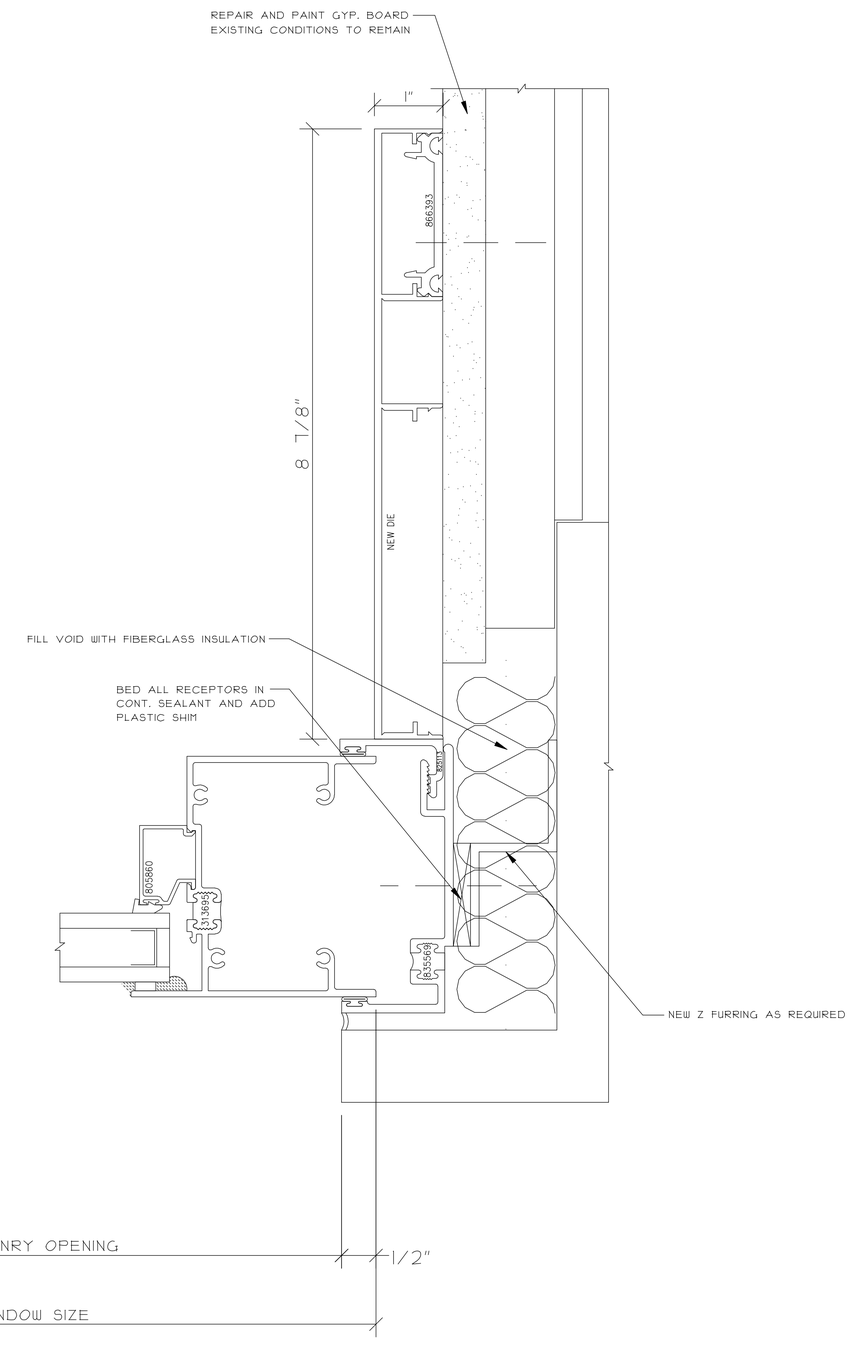

2 FIXED UPPER JAMB
REF. C8/A300

NO.	REVISION DESCRIPTION / ACTION TAKEN	BY	DATE

CONSTRUCTION MANAGER:

ARCHITECT INFO:

PROJECT INFO:

THIS DRAWING, INCLUDING THE INFORMATION, DATA, AND DESIGN, IS CONFIDENTIAL AND THE PROPERTY OF AJAY GLASS CO. IT MAY NOT BE REPRODUCED OR ITS CONTENTS DIVULGED WITHOUT THE WRITTEN PERMISSION OF AJAY GLASS CO.

TITLE
WINDOW WALL DETAILS

DRAWN BY / DATE
SAMPLE

CHECKED BY / DATE

AJAY PROJECT MANAGER:

SCALE:
12" = 1'-0"

AJAY PROJECT NO.:

DWG NO.:
410

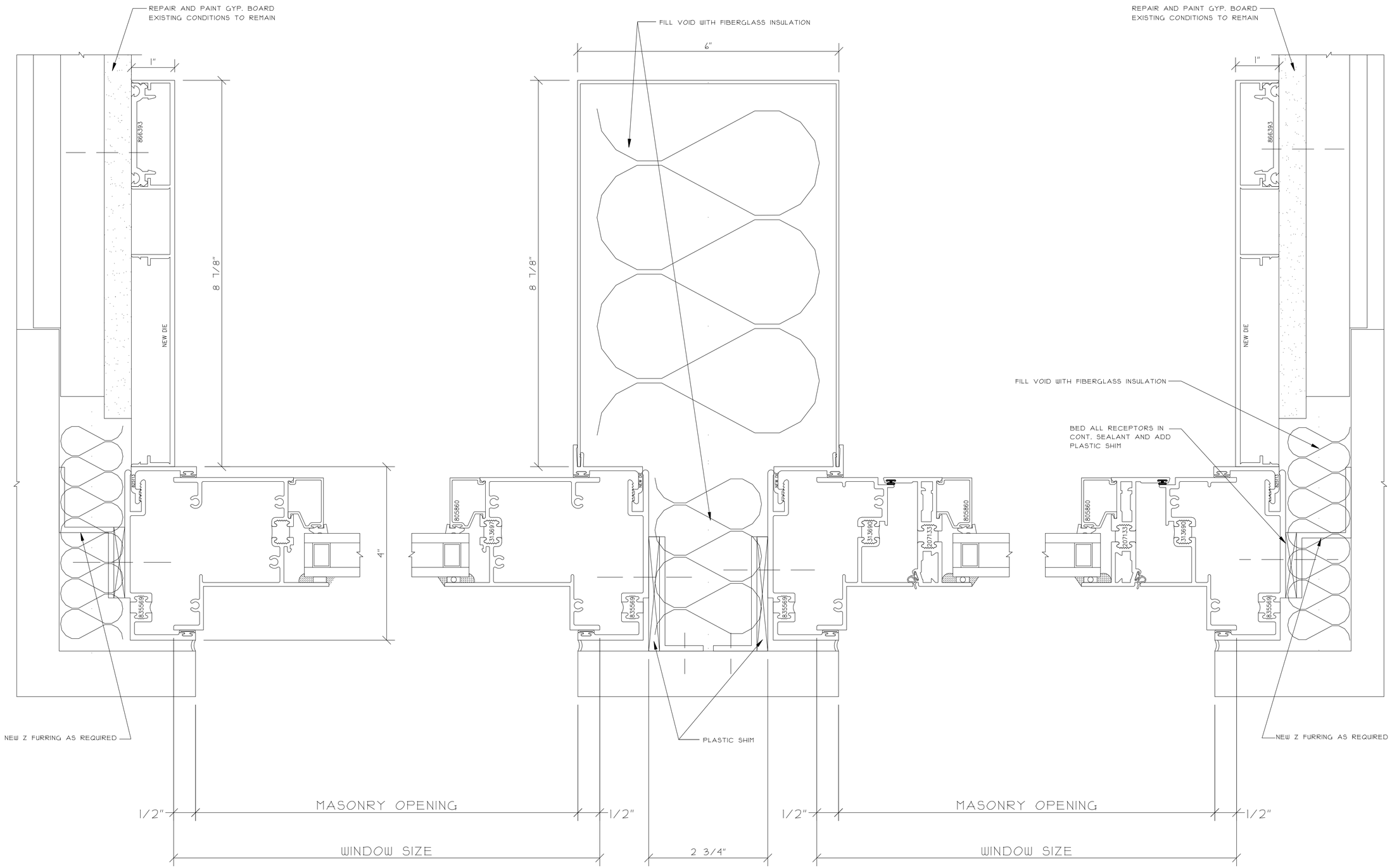

1 FIXED LOWER JAMB

2 FIXED/OPERABLE LOWER COLUMN JAMB
REF. C10/A300

3 OPERABLE LOWER JAMB
REF. C12/A300

NO.	REVISION DESCRIPTION / ACTION TAKEN	BY	DATE

CONSTRUCTION MANAGER:

ARCHITECT INFO:

PROJECT INFO:

THIS DRAWING, INCLUDING THE INFORMATION, DATA, AND DESIGN IS CONFIDENTIAL AND THE PROPERTY OF AJAY GLASS CO. IT IS NOT TO BE REPRODUCED OR ITS CONTENTS DIVULGED WITHOUT THE WRITTEN PERMISSION OF AJAY GLASS CO.

TITLE
WINDOW WALL DETAILS

DRAWN BY / DATE
SAMPLE

CHECKED BY / DATE

AJAY PROJECT MANAGER:

SCALE:
12" = 1'-0"

AJAY PROJECT NO.:

DWG NO.:
411

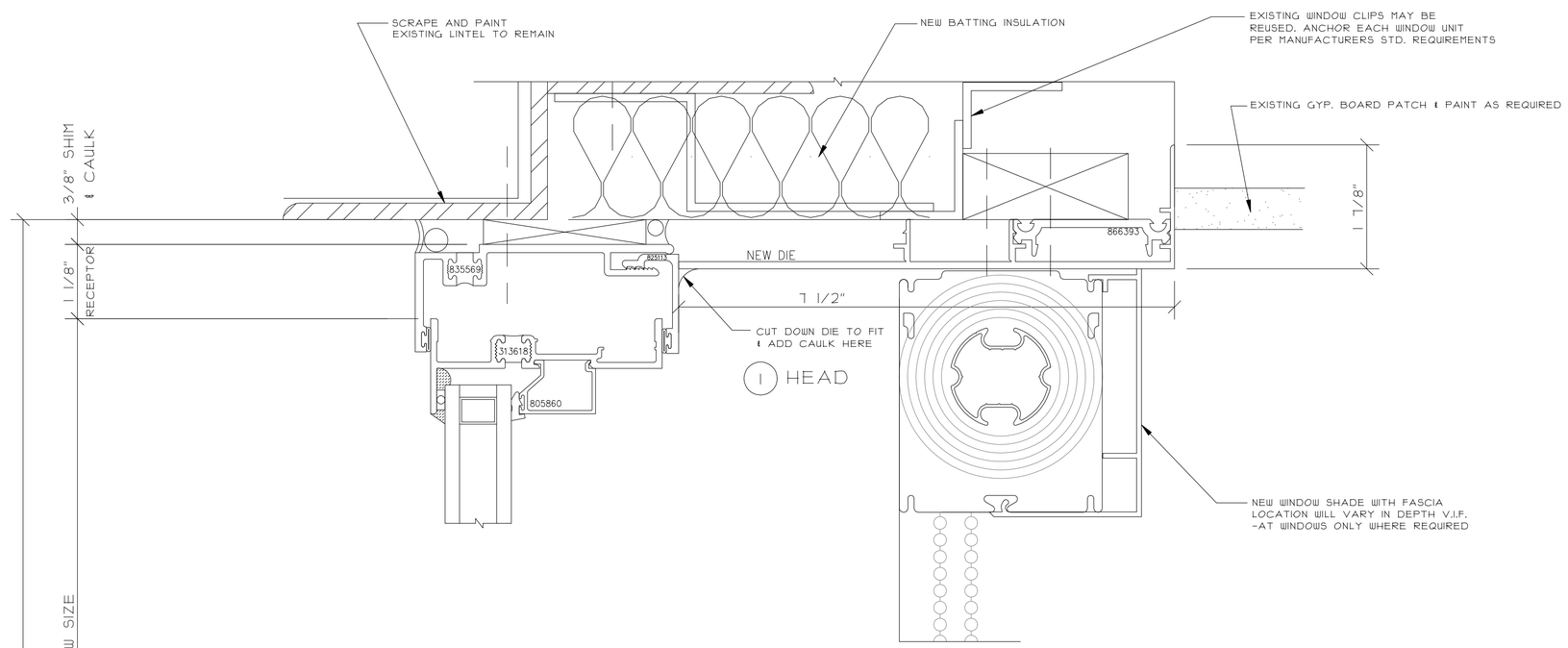

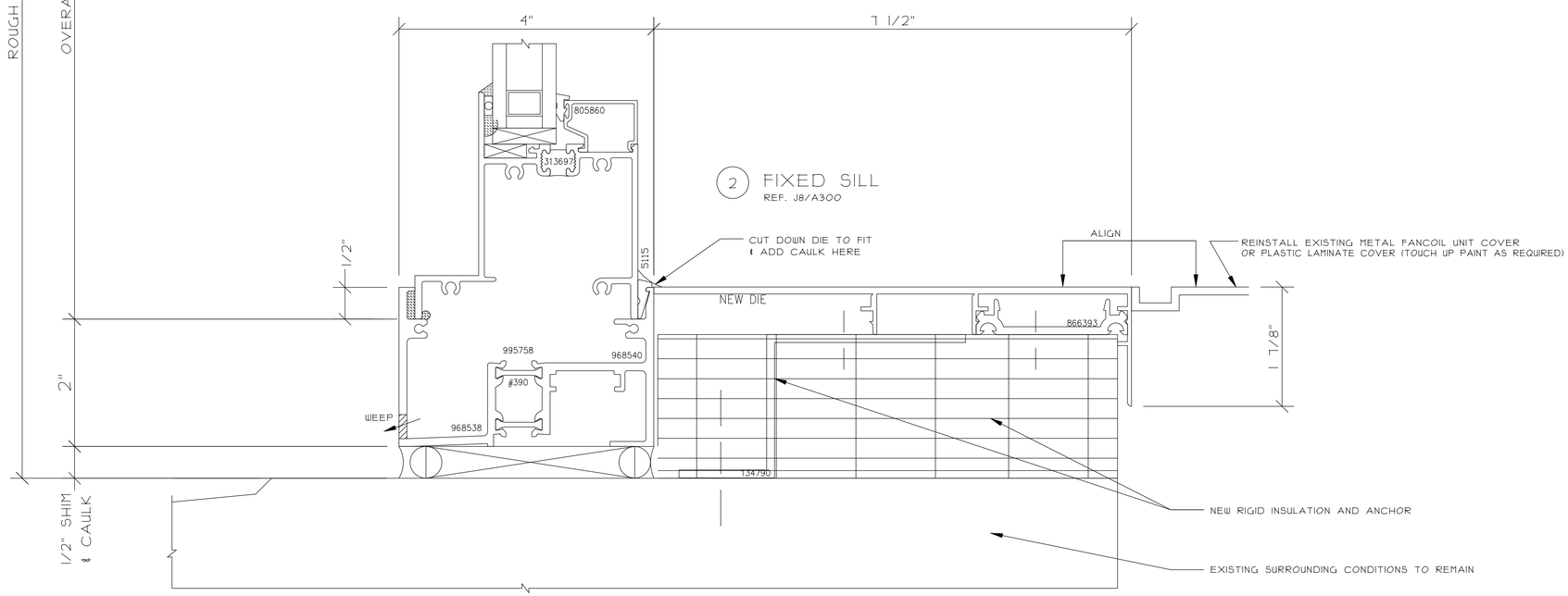

NO.	REVISION DESCRIPTION / ACTION TAKEN	BY	DATE

CONSTRUCTION MANAGER:

ARCHITECT INFO:

PROJECT INFO:

THIS DRAWING INCLUDING THE INFORMATION, DATA AND DESIGN IS CONFIDENTIAL AND THE PROPERTY OF AJAY GLASS CO. IT IS NOT TO BE COPIED, REPRODUCED OR ITS CONTENTS DIVULGED WITHOUT THE WRITTEN PERMISSION OF AJAY GLASS CO.

TITLE
WINDOW WALL DETAILS

DRAWN BY / DATE
SAMPLE

CHECKED BY / DATE

AJAY PROJECT MANAGER:

SCALE:
12" = 1'-0"

AJAY PROJECT NO.:

DWG NO.:
412

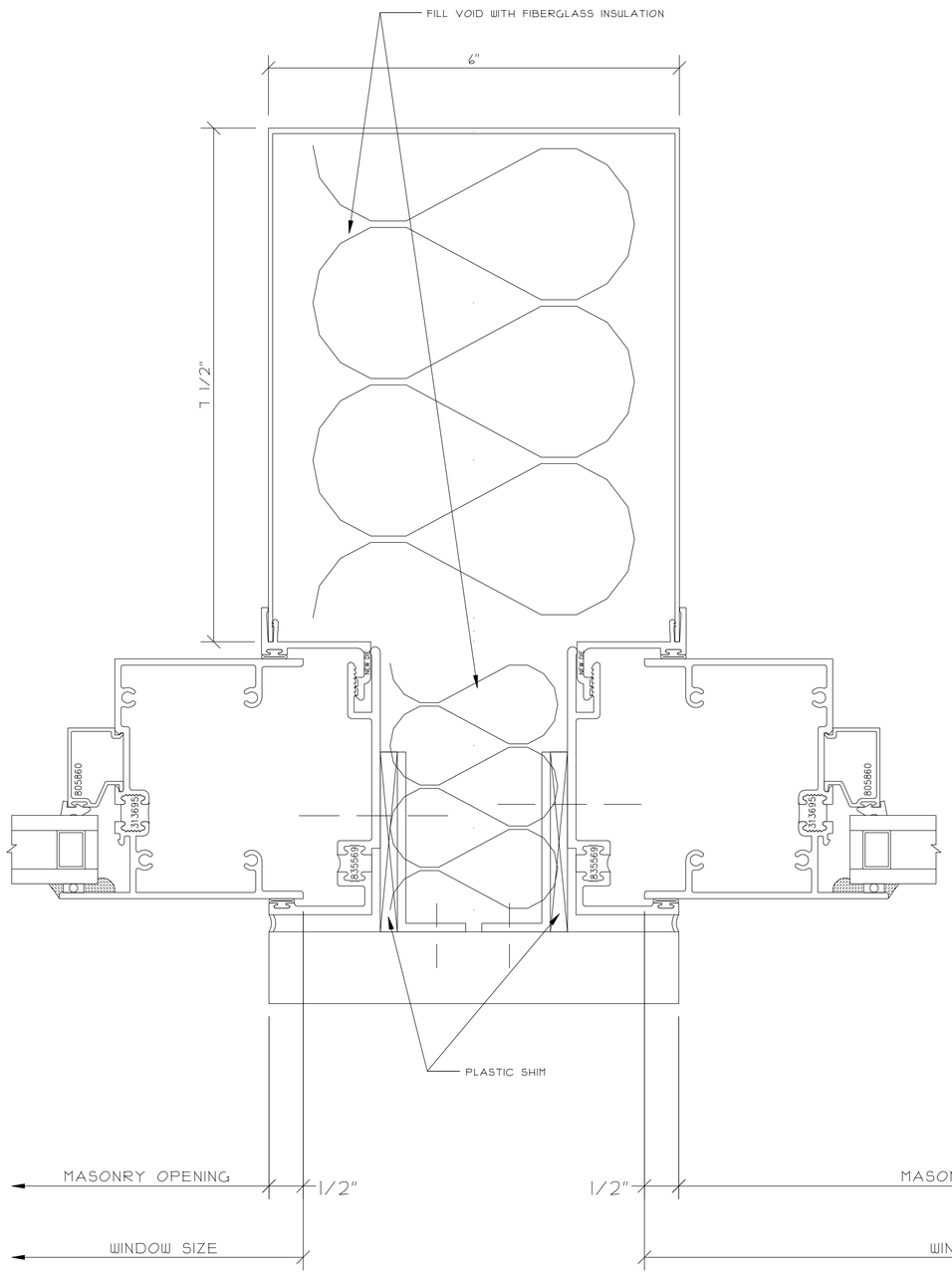

1 FIXED UPPER COLUMN JAMB

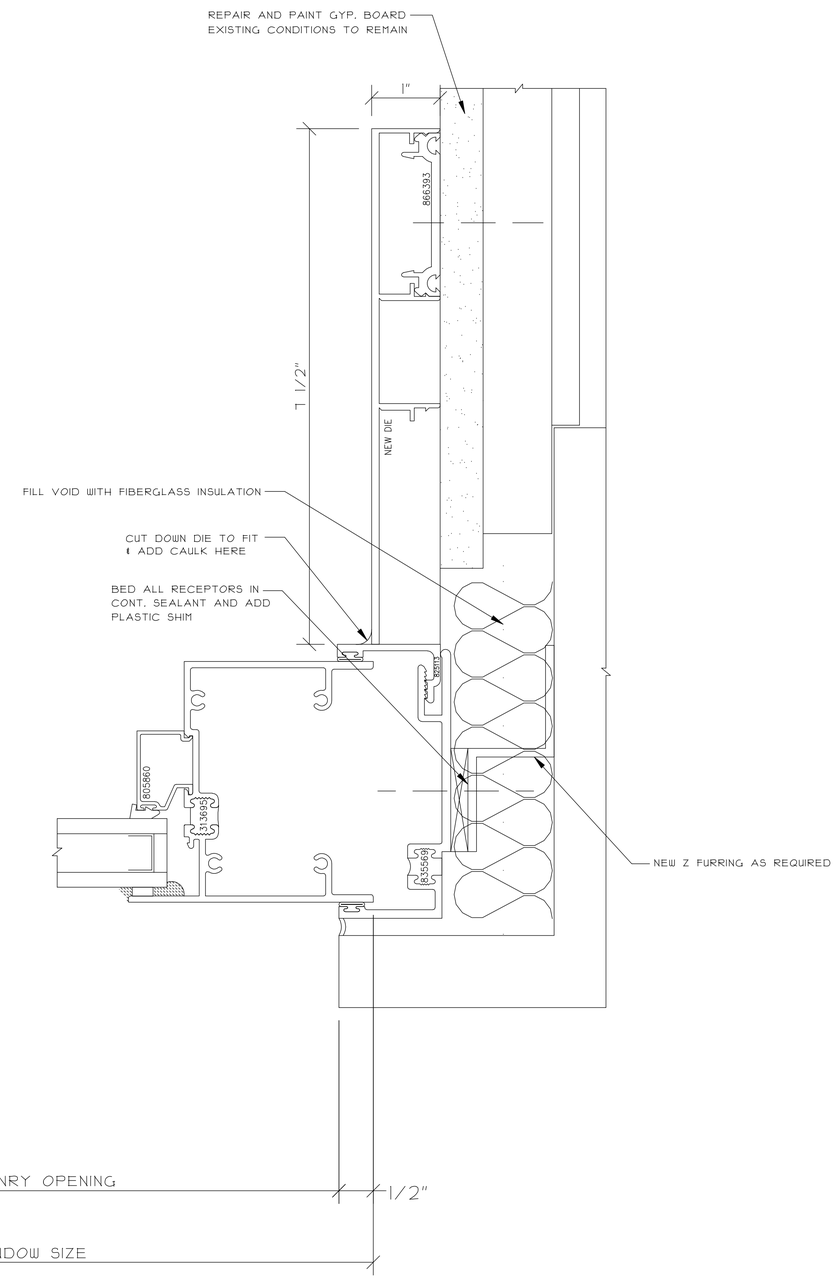

2 FIXED UPPER JAMB
REF. C8/A300

NO.	REVISION DESCRIPTION / ACTION TAKEN	BY	DATE

CONSTRUCTION MANAGER:

ARCHITECT INFO:

PROJECT INFO:

THIS DRAWING, INCLUDING THE INFORMATION, DATA AND DESIGN IS CONFIDENTIAL AND THE PROPERTY OF AJAY GLASS CO. IT IS NOT TO BE COPIED, REPRODUCED OR ITS CONTENTS DIVULGED WITHOUT THE WRITTEN PERMISSION OF AJAY GLASS CO.

TITLE
WINDOW WALL DETAILS

DRAWN BY / DATE
SAMPLE

CHECKED BY / DATE

AJAY PROJECT MANAGER:

SCALE:
12" = 1'-0"

AJAY PROJECT NO.:

DWG NO.:
413

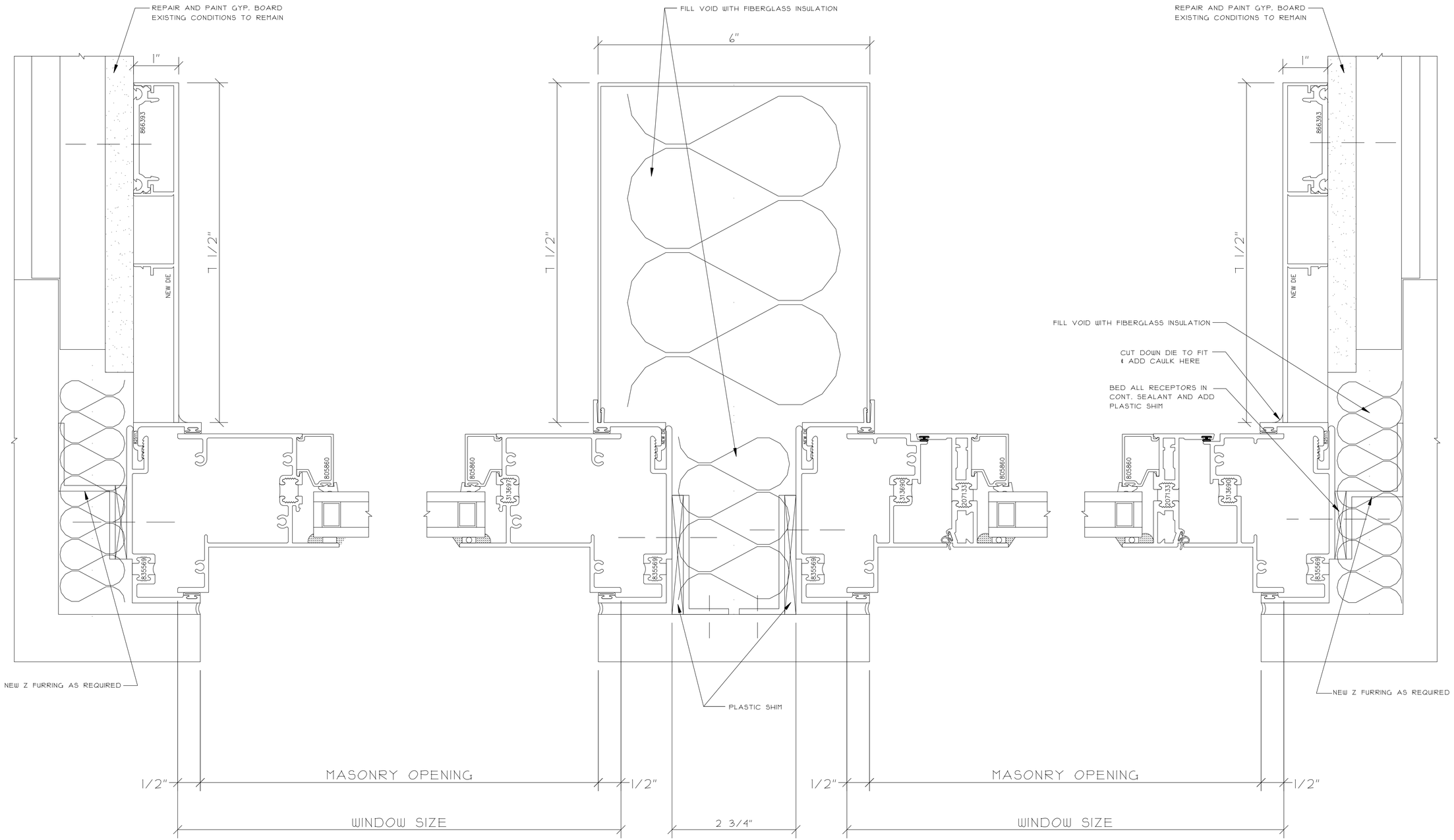

1 FIXED LOWER JAMB

2 FIXED/OPERABLE LOWER COLUMN JAMB
REF. C10/A300

3 OPERABLE JAMB
REF. C12/A300

NO.	REVISION DESCRIPTION / ACTION TAKEN	BY	DATE

CONSTRUCTION MANAGER:

ARCHITECT INFO:

PROJECT INFO:

THIS DRAWING INCLUDING THE INFORMATION, DATA AND DESIGN IS CONFIDENTIAL AND THE PROPERTY OF AJAY GLASS CO. AND MUST BE RETURNED UPON REQUEST. ITS CONTENTS DIVULGED WITHOUT THE WRITTEN PERMISSION OF AJAY GLASS CO.

TITLE
WINDOW WALL DETAILS

DRAWN BY / DATE
SAMPLE

CHECKED BY / DATE

AJAY PROJECT MANAGER:

SCALE:
12" = 1'-0"

AJAY PROJECT NO.:

DWG NO.:
414

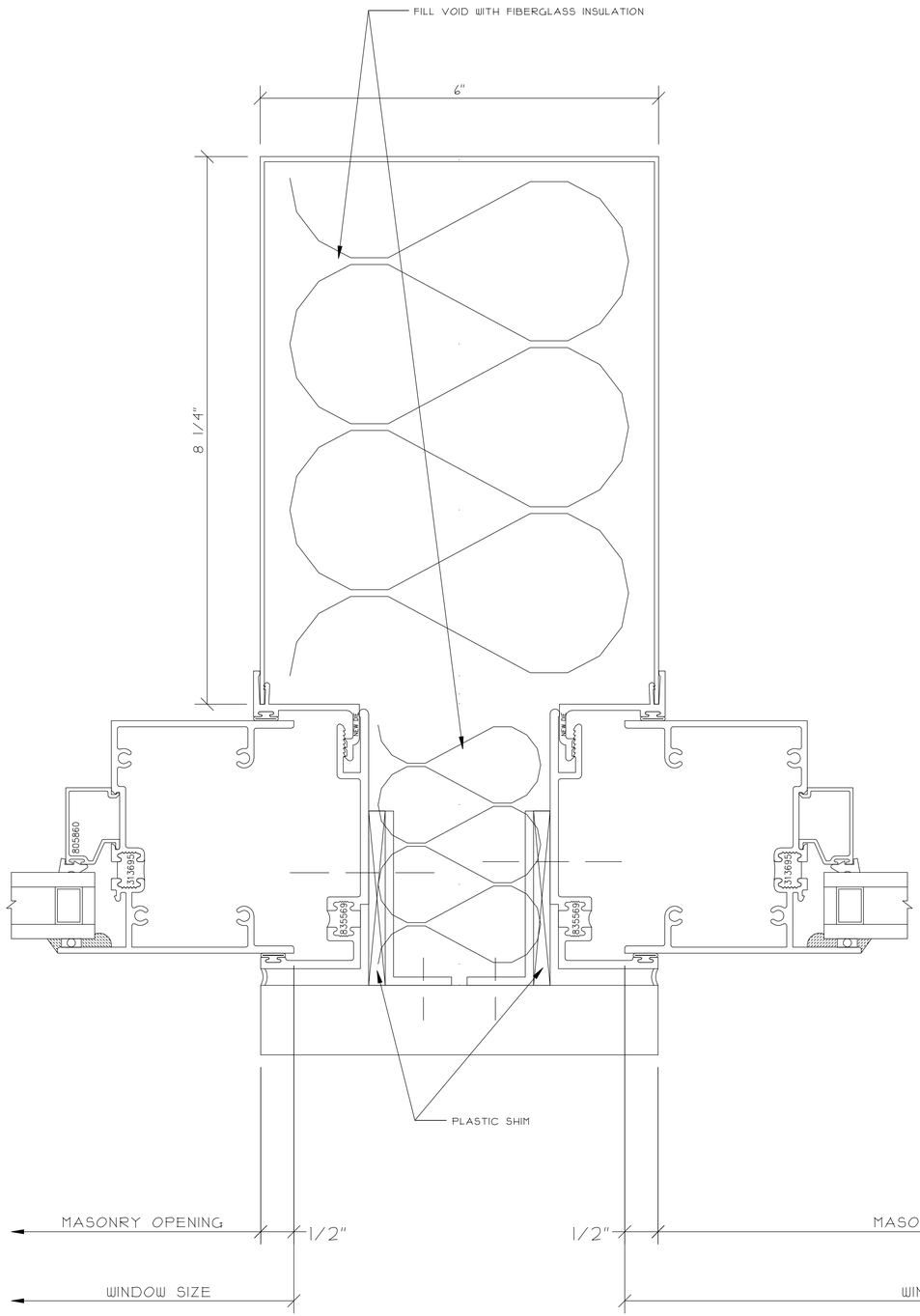

1 FIXED UPPER COLUMN JAMB

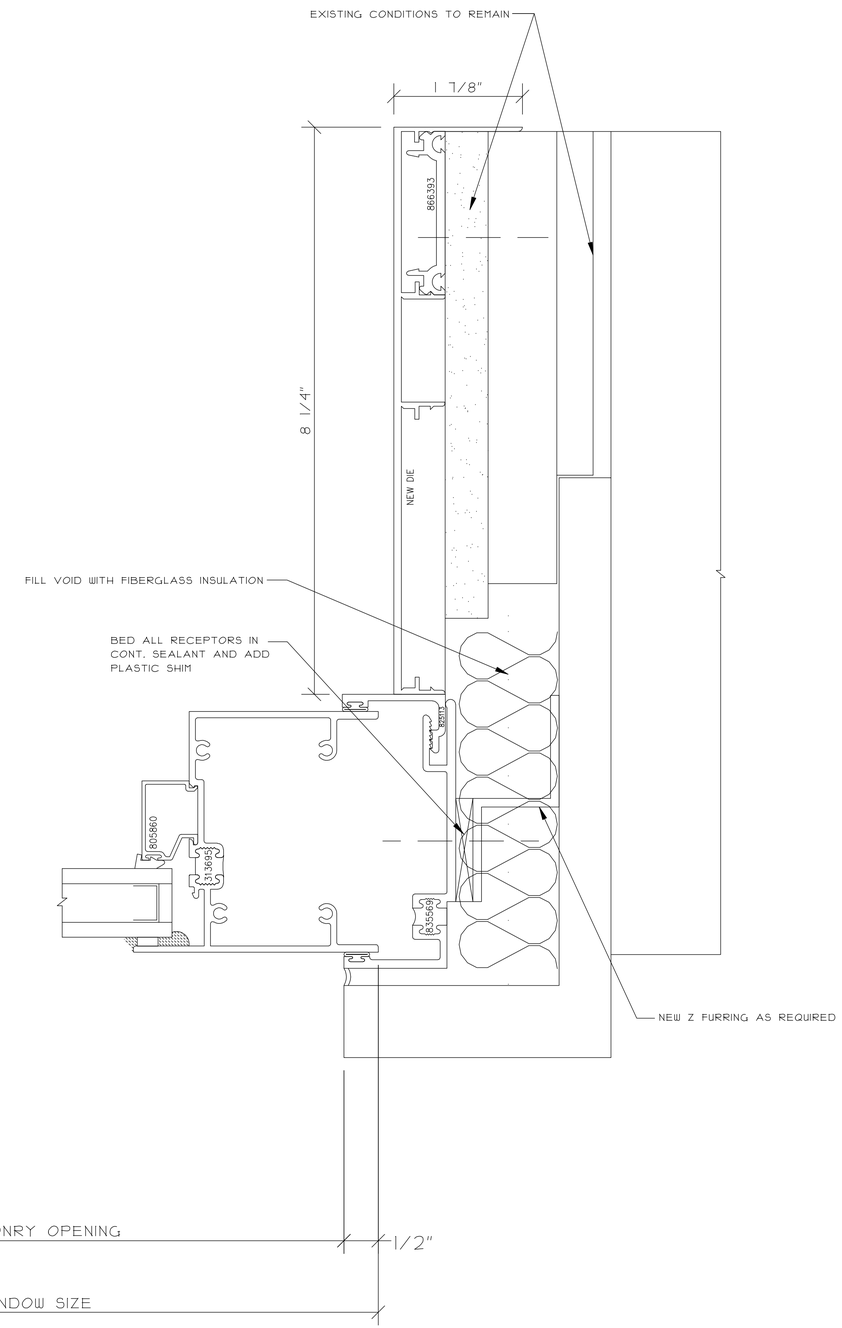

2 FIXED UPPER JAMB
REF. C8/A300

NO.	REVISION DESCRIPTION / ACTION TAKEN	BY	DATE

CONSTRUCTION MANAGER:

ARCHITECT INFO:

PROJECT INFO:

THIS DRAWING, INCLUDING THE INFORMATION, DATA, AND DESIGN IS CONFIDENTIAL AND THE PROPERTY OF AJAY GLASS CO. IT IS TO BE USED, REPRODUCED OR ITS CONTENTS DIVULGED WITHOUT THE WRITTEN PERMISSION OF AJAY GLASS CO.

TITLE
WINDOW WALL DETAILS

DRAWN BY / DATE
SAMPLE

CHECKED BY / DATE

AJAY PROJECT MANAGER:

SCALE:
12" = 1'-0"

AJAY PROJECT NO.:

DWG NO.:
415

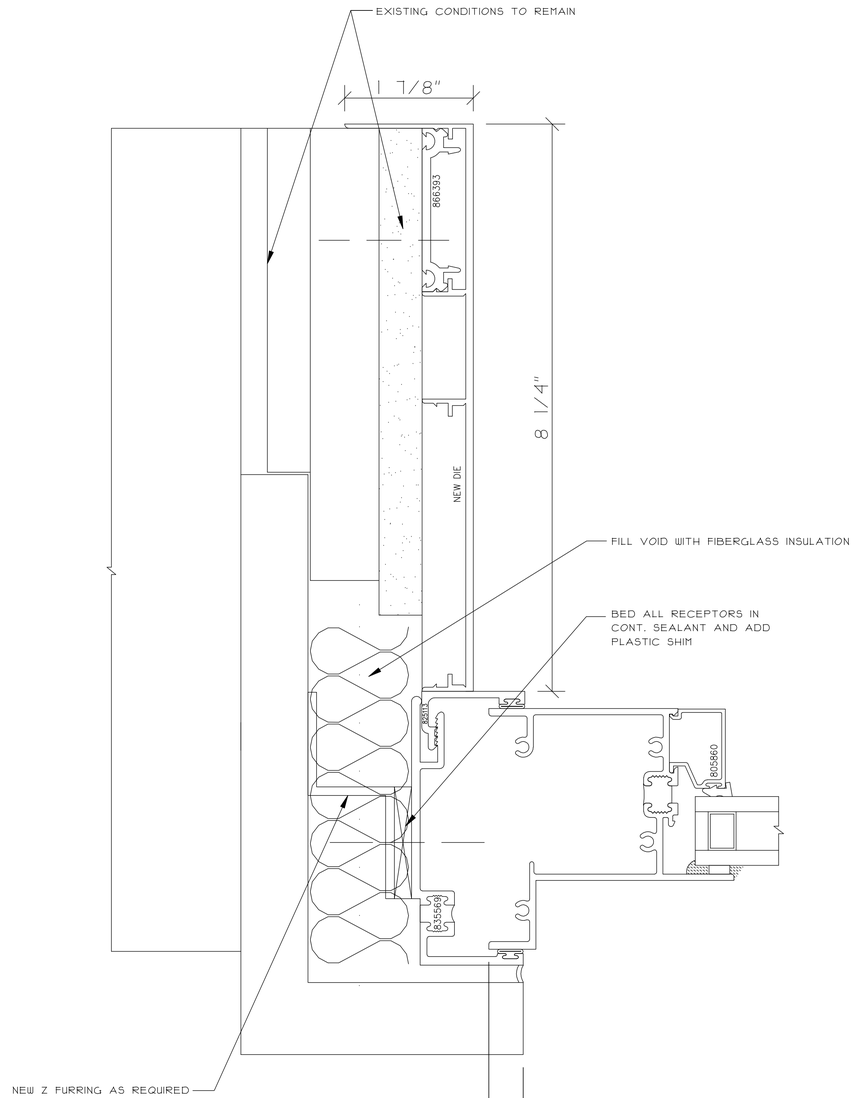

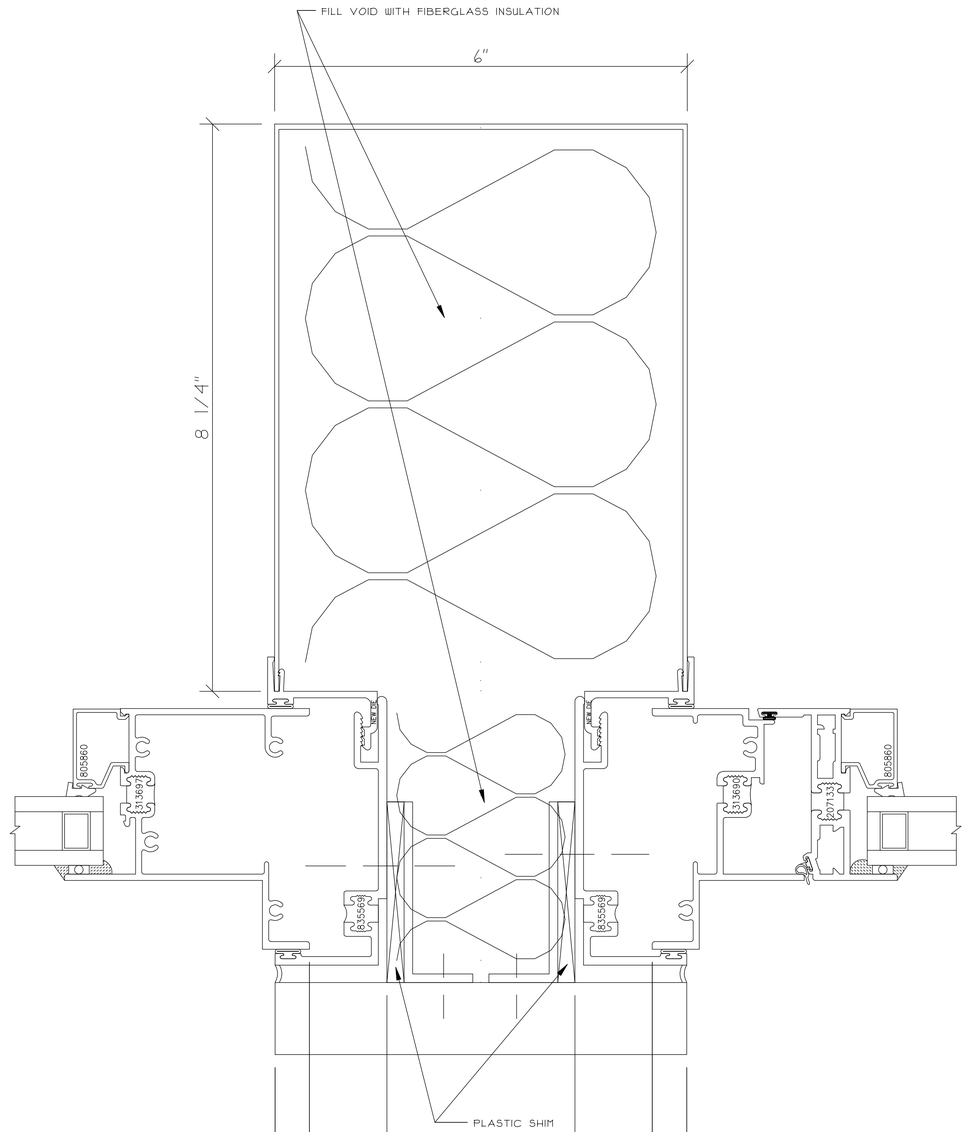

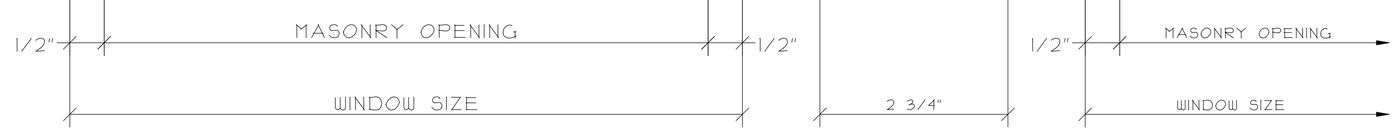

1 FIXED LOWER JAMB

2 FIXED/OPERABLE LOWER COLUMN JAMB
REF. C10/A300

NO.	REVISION DESCRIPTION / ACTION TAKEN	BY	DATE

CONSTRUCTION MANAGER:

ARCHITECT INFO:

PROJECT INFO:

THIS DRAWING, INCLUDING THE INFORMATION, DATA, AND DESIGN IS CONFIDENTIAL AND THE PROPERTY OF AJAY GLASS CO. IT IS NOT TO BE COPIED, REPRODUCED, OR ITS CONTENTS DIVULGED WITHOUT THE WRITTEN PERMISSION OF AJAY GLASS CO.

TITLE
WINDOW WALL DETAILS

DRAWN BY / DATE
SAMPLE

CHECKED BY / DATE

AJAY PROJECT MANAGER:

SCALE:
12" = 1'-0"

AJAY PROJECT NO.:

DWG NO.:
416

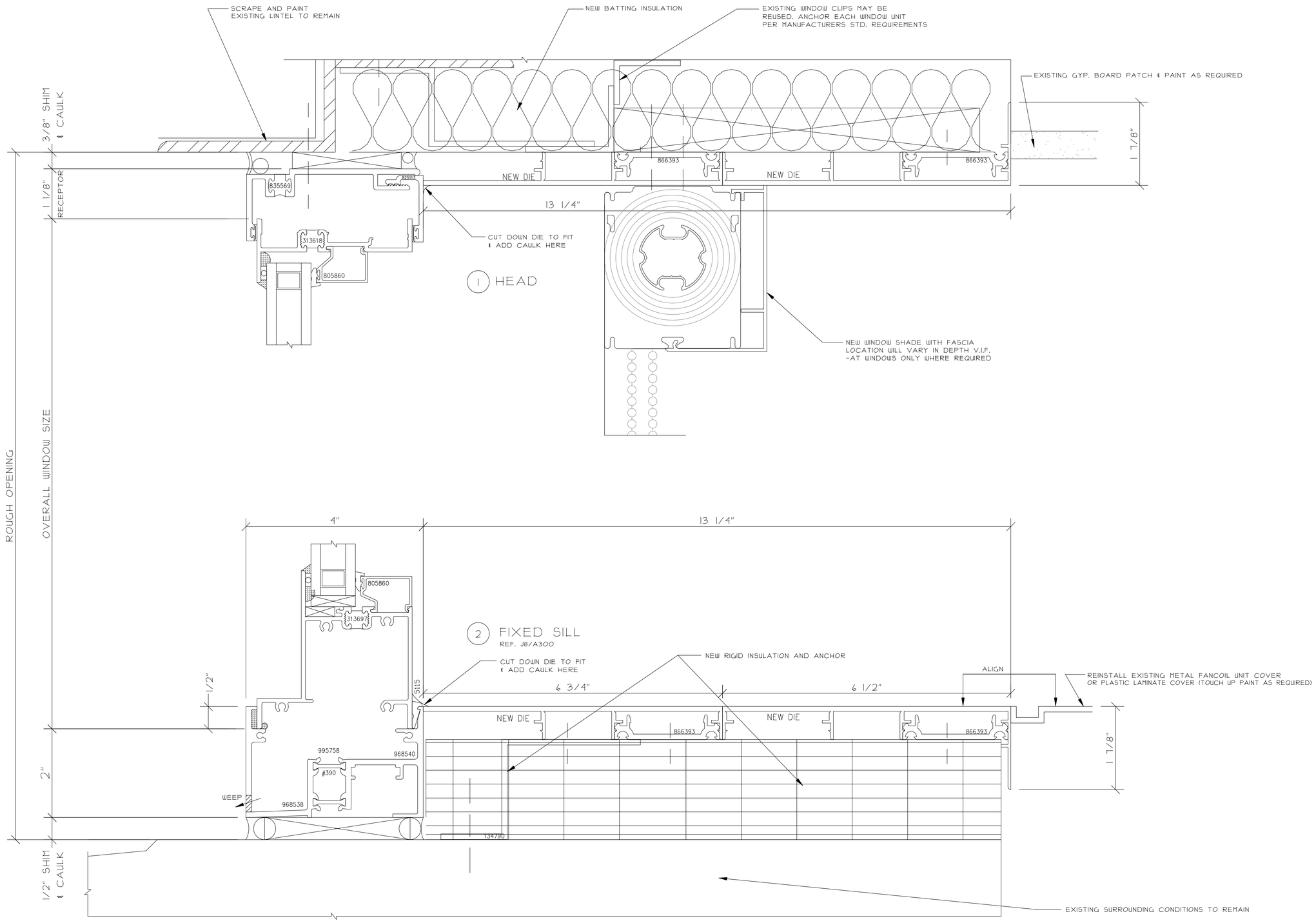

NO.	REVISION DESCRIPTION / ACTION TAKEN	BY	DATE

CONSTRUCTION MANAGER:

ARCHITECT INFO:

PROJECT INFO:

THIS DRAWING INCLUDING THE INFORMATION, DATA AND DESIGN IS CONFIDENTIAL AND THE PROPERTY OF AJAY GLASS CO. NOT TO BE COPIED, REPRODUCED OR ITS CONTENTS DIVULGED WITHOUT THE WRITTEN PERMISSION OF AJAY GLASS CO.

TITLE
WINDOW WALL DETAILS

DRAWN BY / DATE
SAMPLE

CHECKED BY / DATE

AJAY PROJECT MANAGER:

SCALE:
12" = 1'-0"

AJAY PROJECT NO.:

DWG NO.:
417

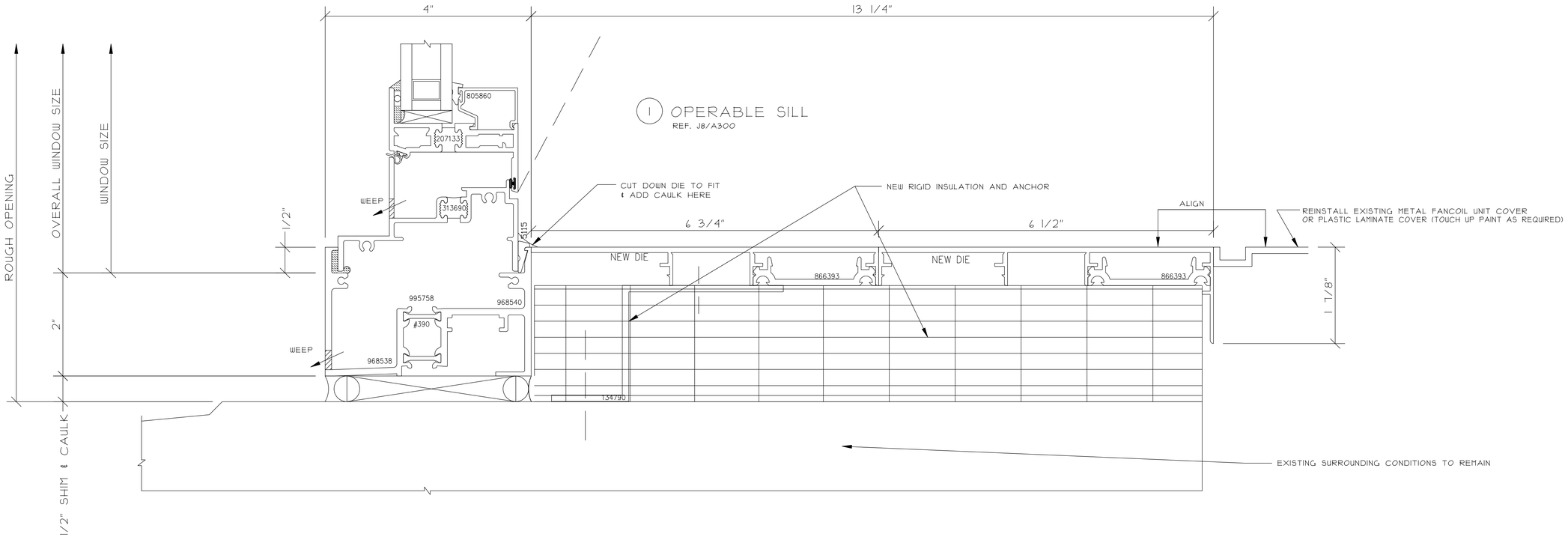

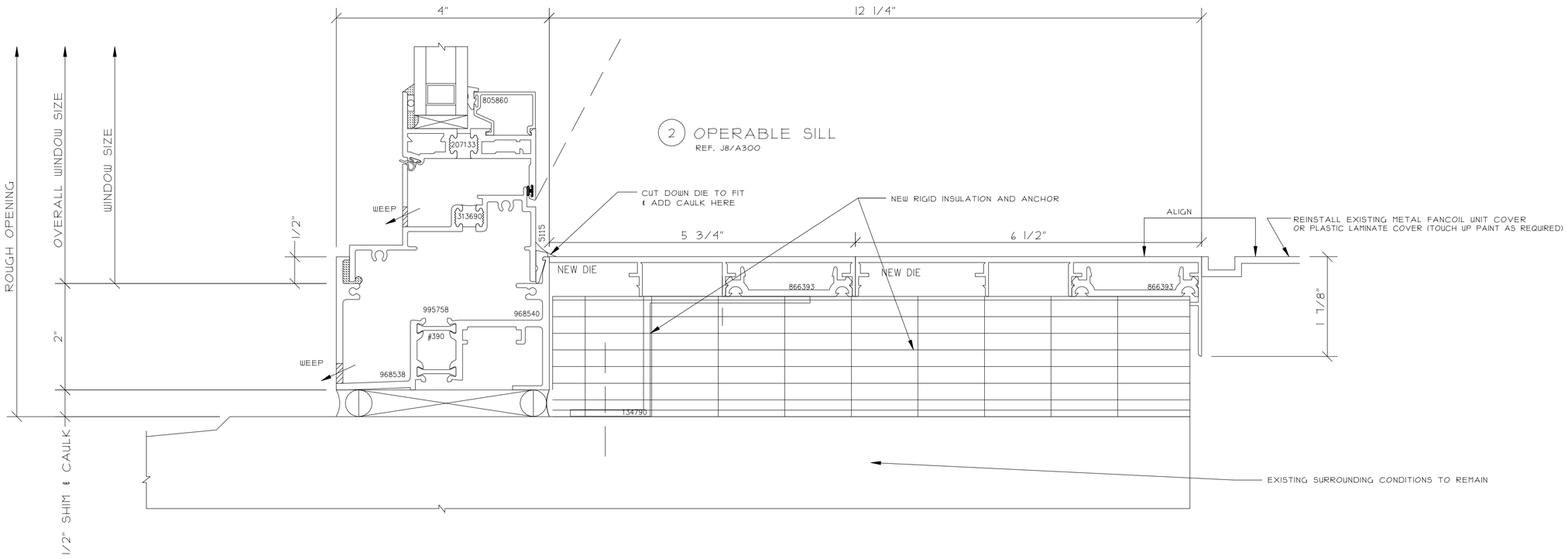

NO.	REVISION DESCRIPTION / ACTION TAKEN	BY	DATE

CONSTRUCTION MANAGER:

ARCHITECT INFO:

PROJECT INFO:

THIS DRAWING INCLUDING THE INFORMATION, DATA AND DESIGN IS CONFIDENTIAL AND THE PROPERTY OF AJAY GLASS CO. IT MAY NOT BE COPIED, REPRODUCED OR ITS CONTENTS DIVULGED WITHOUT THE WRITTEN PERMISSION OF AJAY GLASS CO.

TITLE
WINDOW WALL DETAILS

DRAWN BY / DATE
SAMPLE

CHECKED BY / DATE

AJAY PROJECT MANAGER:

SCALE:
12" = 1'-0"

AJAY PROJECT NO.:

DWG NO.:
418

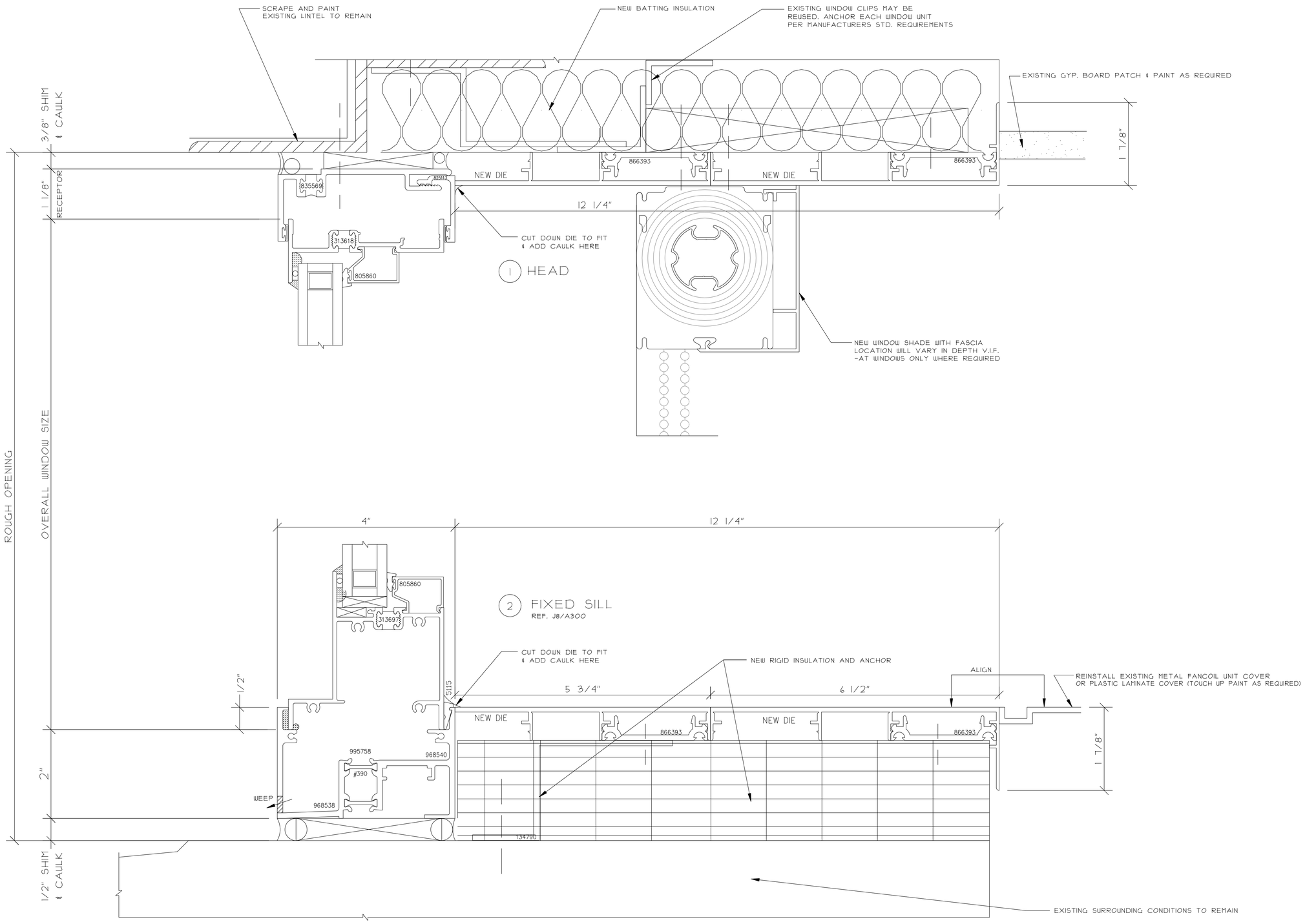

NO.	REVISION DESCRIPTION / ACTION TAKEN	BY	DATE

CONSTRUCTION MANAGER:

ARCHITECT INFO:

PROJECT INFO:

THIS DRAWING INCLUDING THE INFORMATION, DATA AND DESIGN IS CONFIDENTIAL AND THE PROPERTY OF AJAY GLASS CO. IT MAY NOT BE COPIED, REPRODUCED OR ITS CONTENTS DIVULGED WITHOUT THE WRITTEN PERMISSION OF AJAY GLASS CO.

TITLE
WINDOW WALL DETAILS

DRAWN BY / DATE
SAMPLE

CHECKED BY / DATE

AJAY PROJECT MANAGER:

SCALE:
12" = 1'-0"

AJAY PROJECT NO.:

DWG NO.:
419

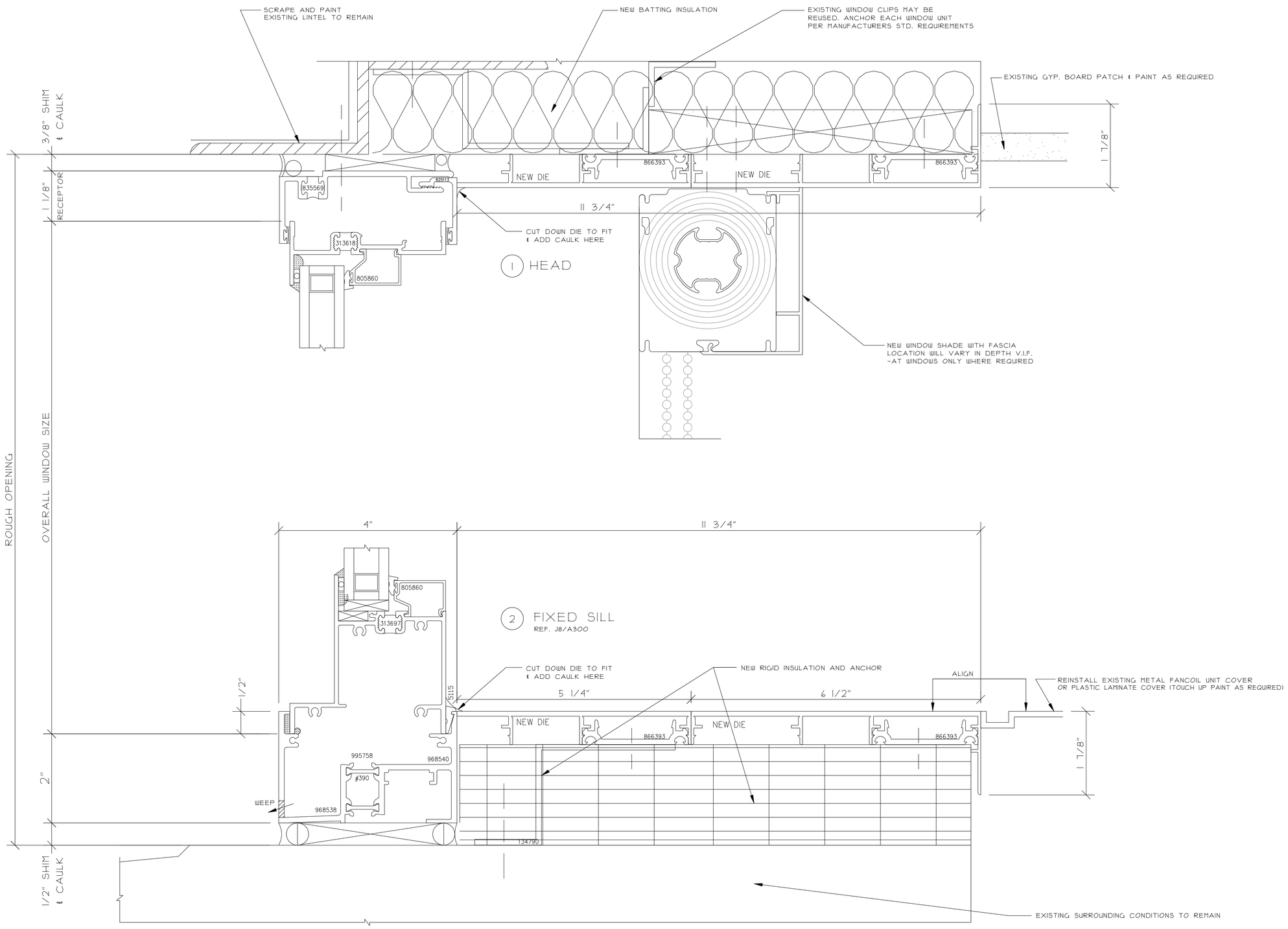

NO.	REVISION DESCRIPTION / ACTION TAKEN	BY	DATE

CONSTRUCTION MANAGER:

ARCHITECT INFO:

PROJECT INFO:

THIS DRAWING INCLUDING THE INFORMATION, DATA AND DESIGN IS CONFIDENTIAL AND THE PROPERTY OF AJAY GLASS CO. IT MAY NOT BE COPIED, REPRODUCED OR ITS CONTENTS DIVULGED WITHOUT THE WRITTEN PERMISSION OF AJAY GLASS CO.

TITLE
WINDOW WALL DETAILS

DRAWN BY / DATE
SAMPLE

CHECKED BY / DATE

AJAY PROJECT MANAGER:

SCALE:
12" = 1'-0"

AJAY PROJECT NO.:

DWG NO.:
420

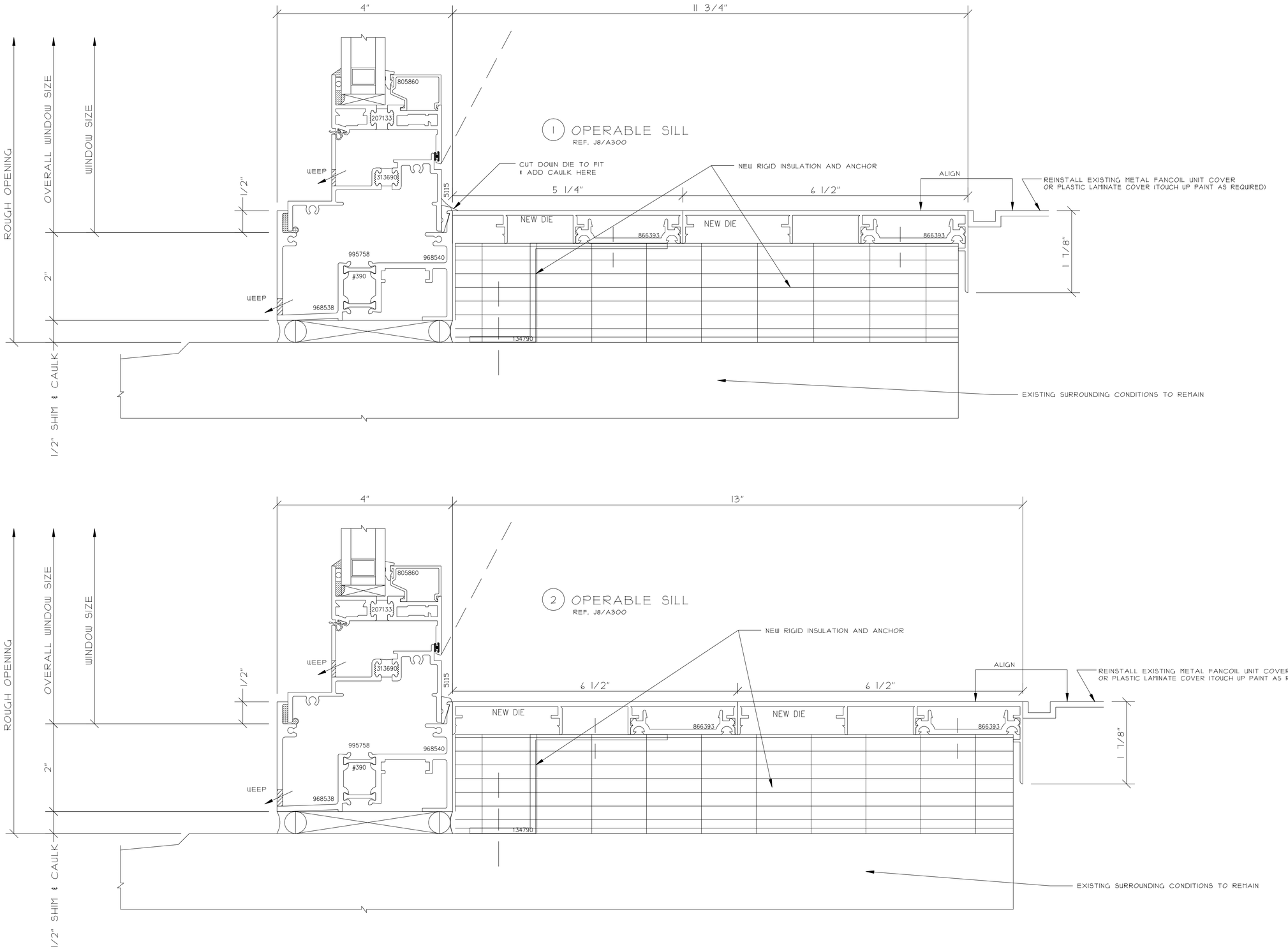

NO.	REVISION DESCRIPTION / ACTION TAKEN	BY	DATE

CONSTRUCTION MANAGER:

ARCHITECT INFO:

PROJECT INFO:

THIS DRAWING INCLUDING THE INFORMATION, DATA AND DESIGN IS CONFIDENTIAL AND THE PROPERTY OF AJAY GLASS CO. AND CANNOT BE COPIED, REPRODUCED OR ITS CONTENTS DIVULGED WITHOUT THE WRITTEN PERMISSION OF AJAY GLASS CO.

TITLE
WINDOW WALL DETAILS

DRAWN BY / DATE
SAMPLE

CHECKED BY / DATE

AJAY PROJECT MANAGER:

SCALE:
12" = 1'-0"

AJAY PROJECT NO.:

DWG NO.:
421

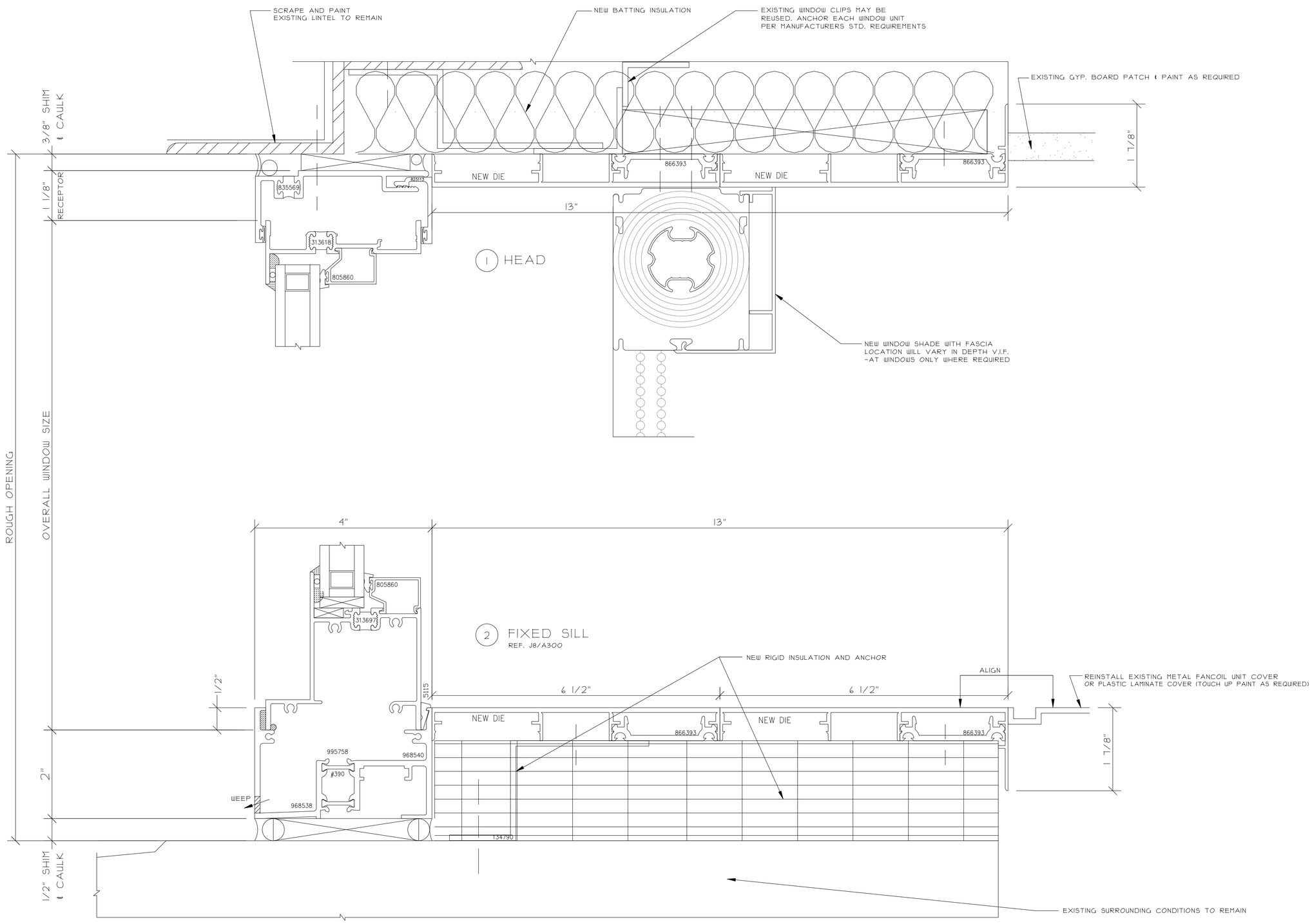

NO.	REVISION DESCRIPTION / ACTION TAKEN	BY	DATE

CONSTRUCTION MANAGER:

ARCHITECT INFO:

PROJECT INFO:

THIS DRAWING INCLUDING THE INFORMATION, DATA AND DESIGN IS CONFIDENTIAL AND THE PROPERTY OF AJAY GLASS CO. IT MAY NOT BE COPIED, REPRODUCED OR ITS CONTENTS DIVULGED WITHOUT THE WRITTEN PERMISSION OF AJAY GLASS CO.

TITLE
WINDOW WALL DETAILS

DRAWN BY / DATE
SAMPLE

CHECKED BY / DATE

AJAY PROJECT MANAGER:

SCALE:
12" = 1'-0"

AJAY PROJECT NO.:

DWG NO.:
422

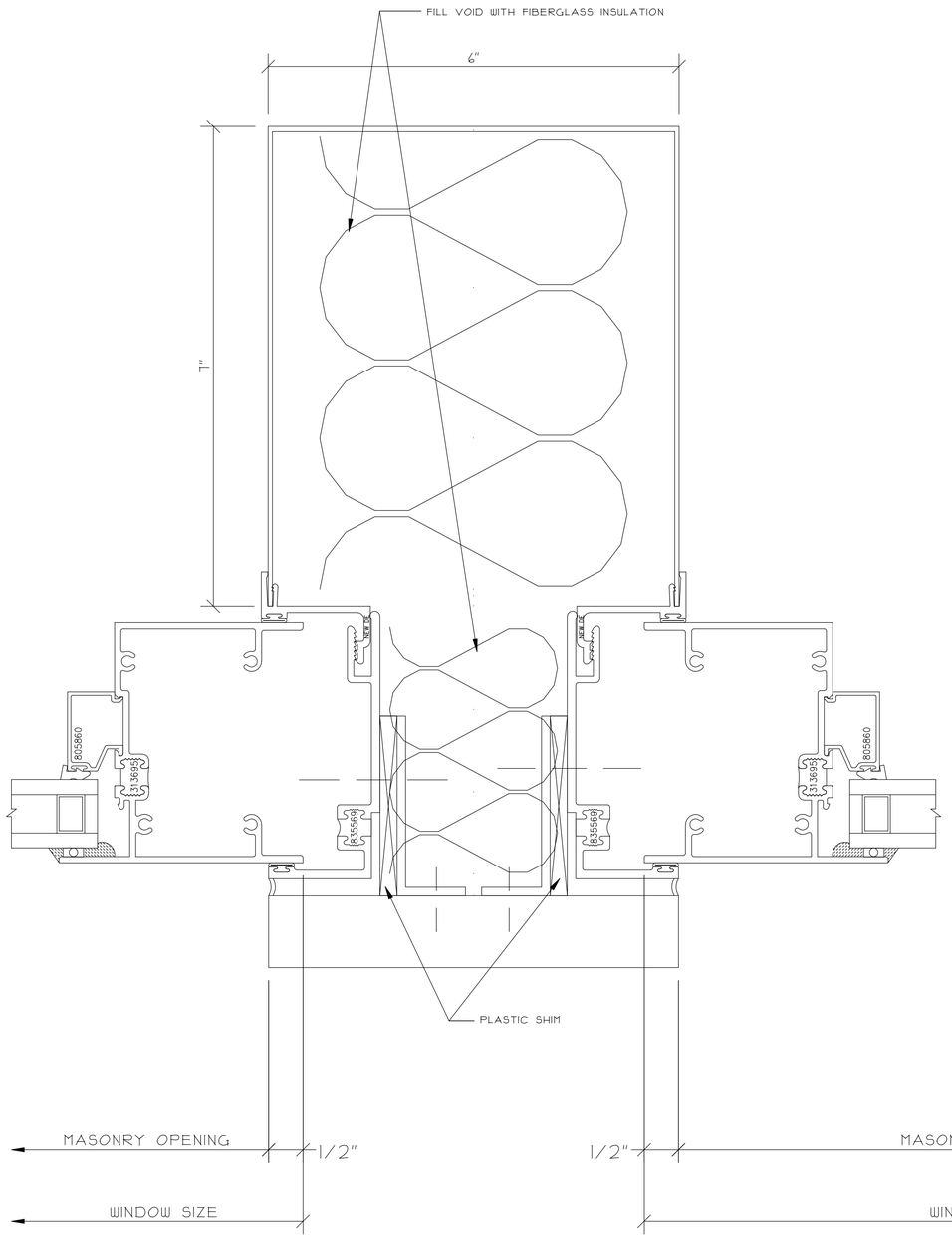

1 FIXED UPPER COLUMN JAMB

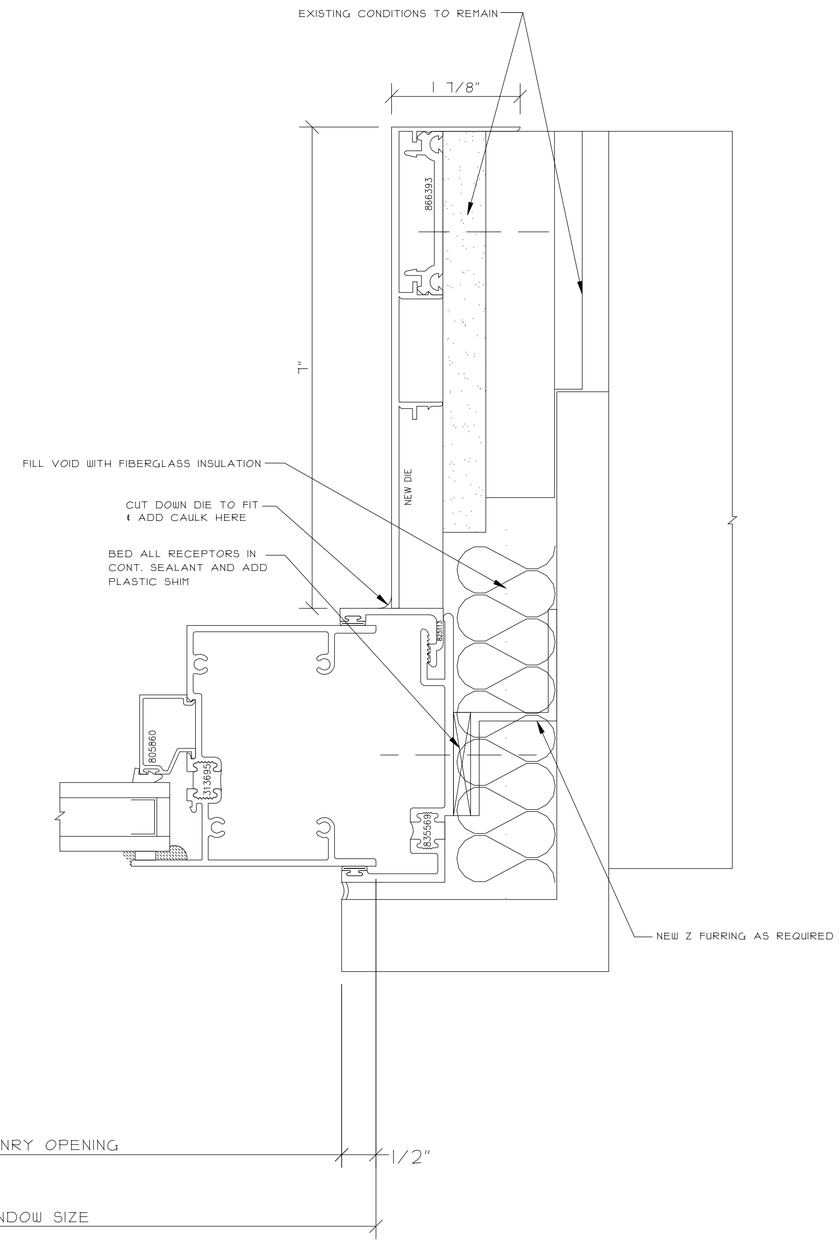

2 FIXED UPPER JAMB
REF. C8/A300

NO.	REVISION DESCRIPTION / ACTION TAKEN	BY	DATE

CONSTRUCTION MANAGER:

ARCHITECT INFO:

PROJECT INFO:

THIS DRAWING, INCLUDING THE INFORMATION, DATA AND DESIGN IS CONFIDENTIAL AND THE PROPERTY OF AJAY GLASS CO. IT MAY NOT BE COPIED, REPRODUCED OR ITS CONTENTS DIVULGED WITHOUT THE WRITTEN PERMISSION OF AJAY GLASS CO.

TITLE
WINDOW WALL DETAILS

DRAWN BY / DATE
SAMPLE

CHECKED BY / DATE

AJAY PROJECT MANAGER:

SCALE:
12" = 1'-0"

AJAY PROJECT NO.:

DWG NO.:
423

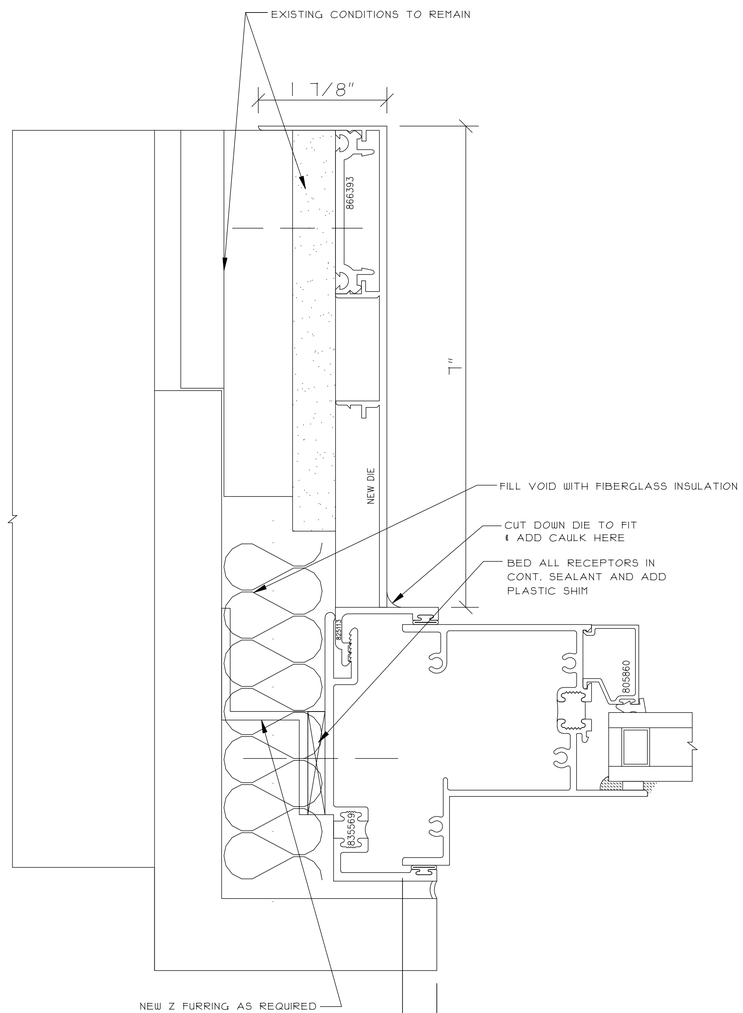

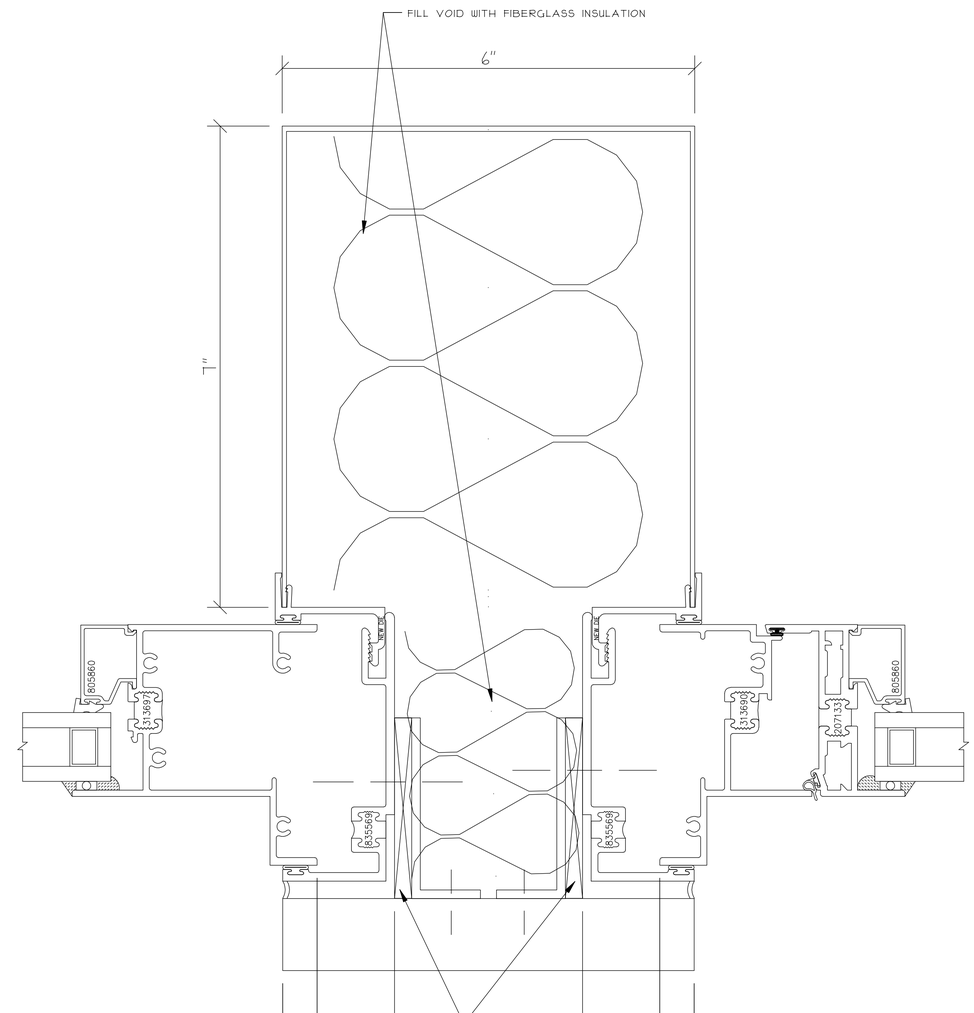

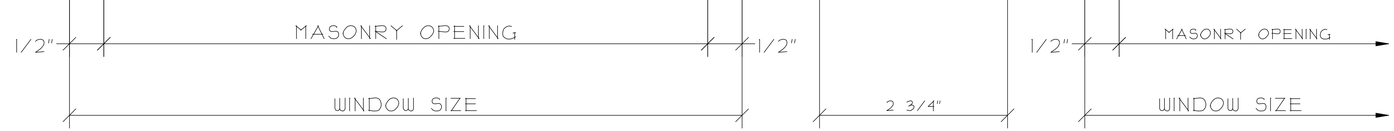

1 FIXED LOWER JAMB

2 FIXED/OPERABLE LOWER COLUMN JAMB
REF. C10/A300

NO.	REVISION DESCRIPTION / ACTION TAKEN	BY	DATE

CONSTRUCTION MANAGER:

ARCHITECT INFO:

PROJECT INFO:

THIS DRAWING INCLUDING THE INFORMATION, DATA AND DESIGN IS CONFIDENTIAL AND THE PROPERTY OF AJAY GLASS CO. IT IS NOT TO BE COPIED, REPRODUCED OR ITS CONTENTS DIVULGED WITHOUT THE WRITTEN PERMISSION OF AJAY GLASS CO.

TITLE
WINDOW WALL DETAILS

DRAWN BY / DATE
SAMPLE

CHECKED BY / DATE

AJAY PROJECT MANAGER:

SCALE:
12" = 1'-0"

AJAY PROJECT NO.:

DWG NO.:
424

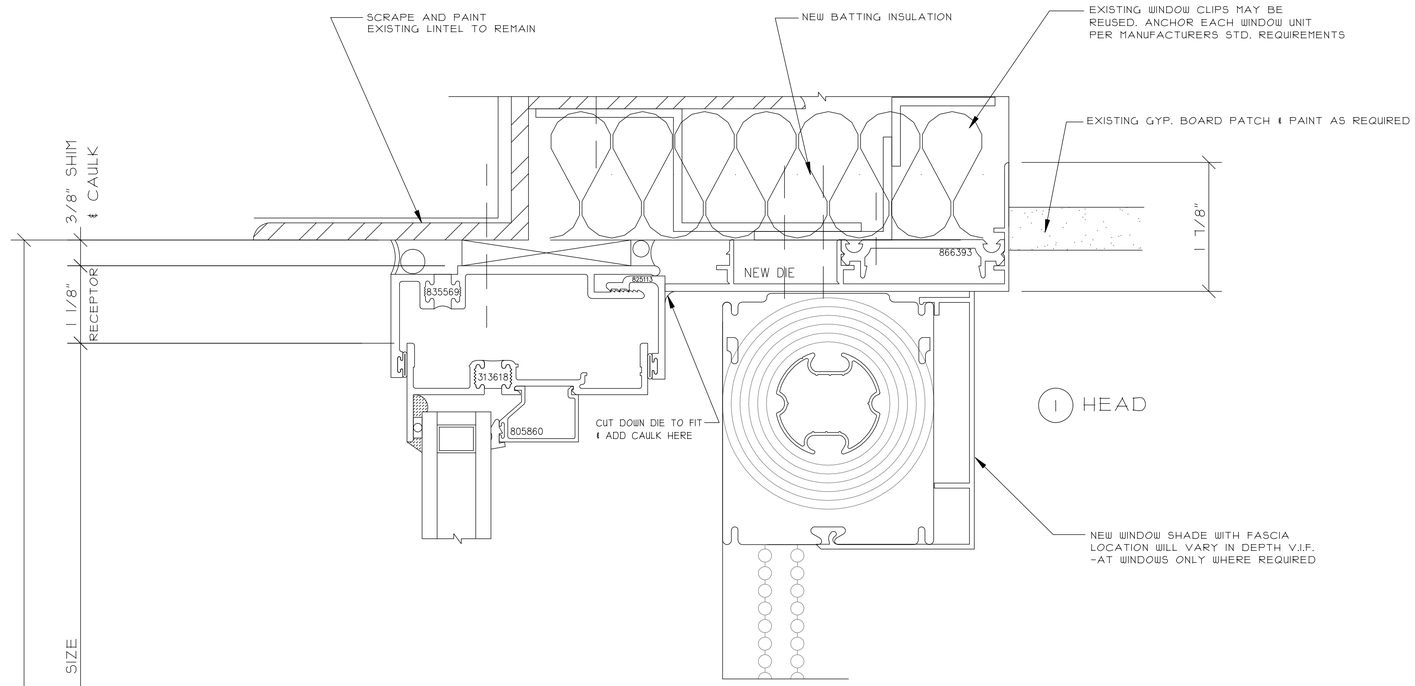

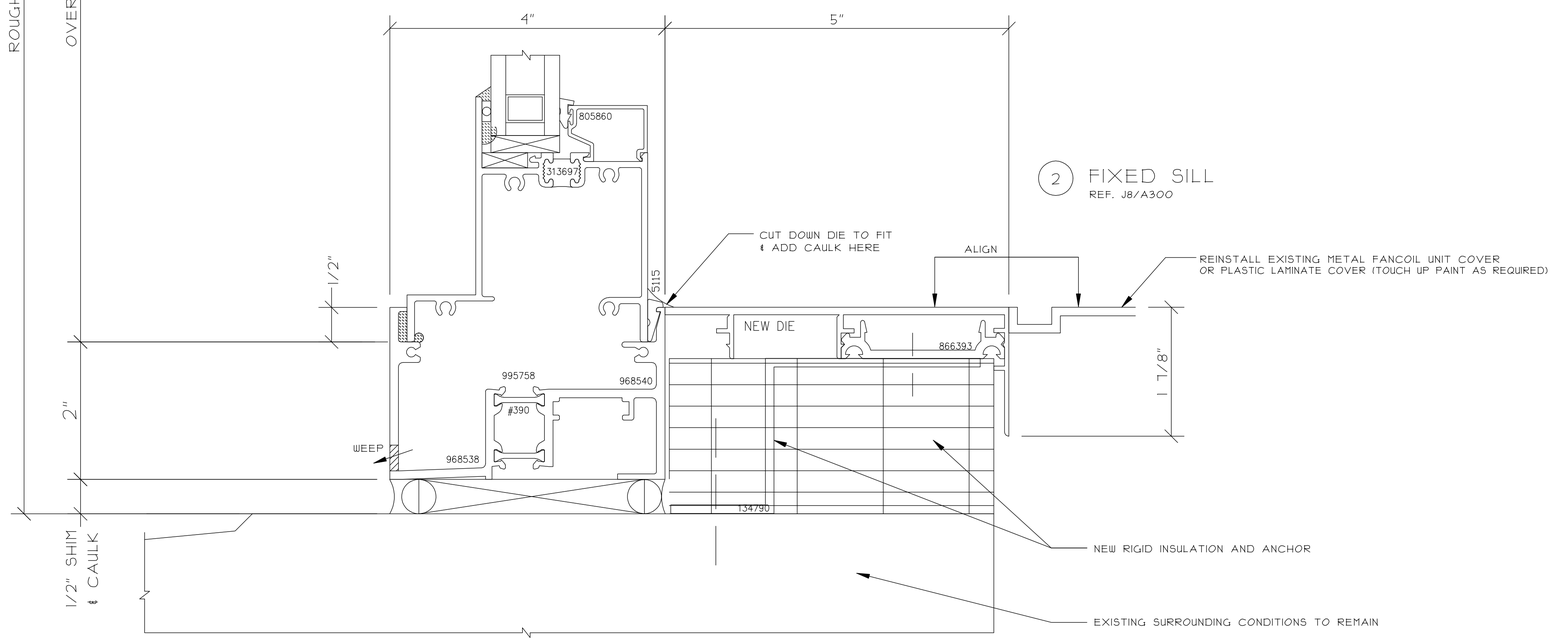

NO.	REVISION DESCRIPTION / ACTION TAKEN	BY	DATE

CONSTRUCTION MANAGER:

ARCHITECT INFO:

PROJECT INFO:

THIS DRAWING INCLUDING THE INFORMATION, DATA AND DESIGN IS CONFIDENTIAL AND THE PROPERTY OF AJAY GLASS CO. IT IS NOT TO BE COPIED, REPRODUCED OR ITS CONTENTS DIVULGED WITHOUT THE WRITTEN PERMISSION OF AJAY GLASS CO.

TITLE
WINDOW WALL DETAILS

DRAWN BY / DATE
SAMPLE

CHECKED BY / DATE

AJAY PROJECT MANAGER:

SCALE:
12" = 1'-0"

AJAY PROJECT NO.:

DWG NO.:
425

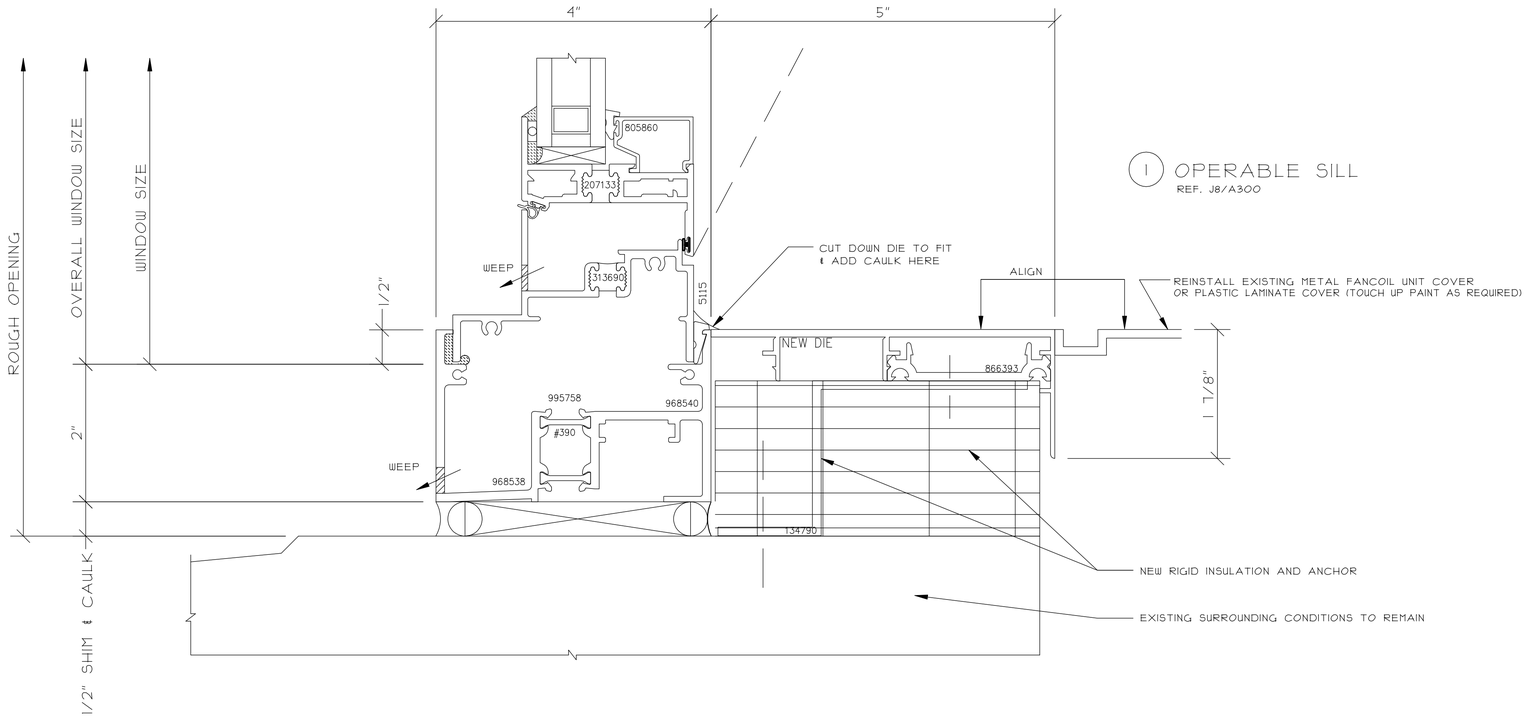

1 OPERABLE SILL
REF. J8/A300

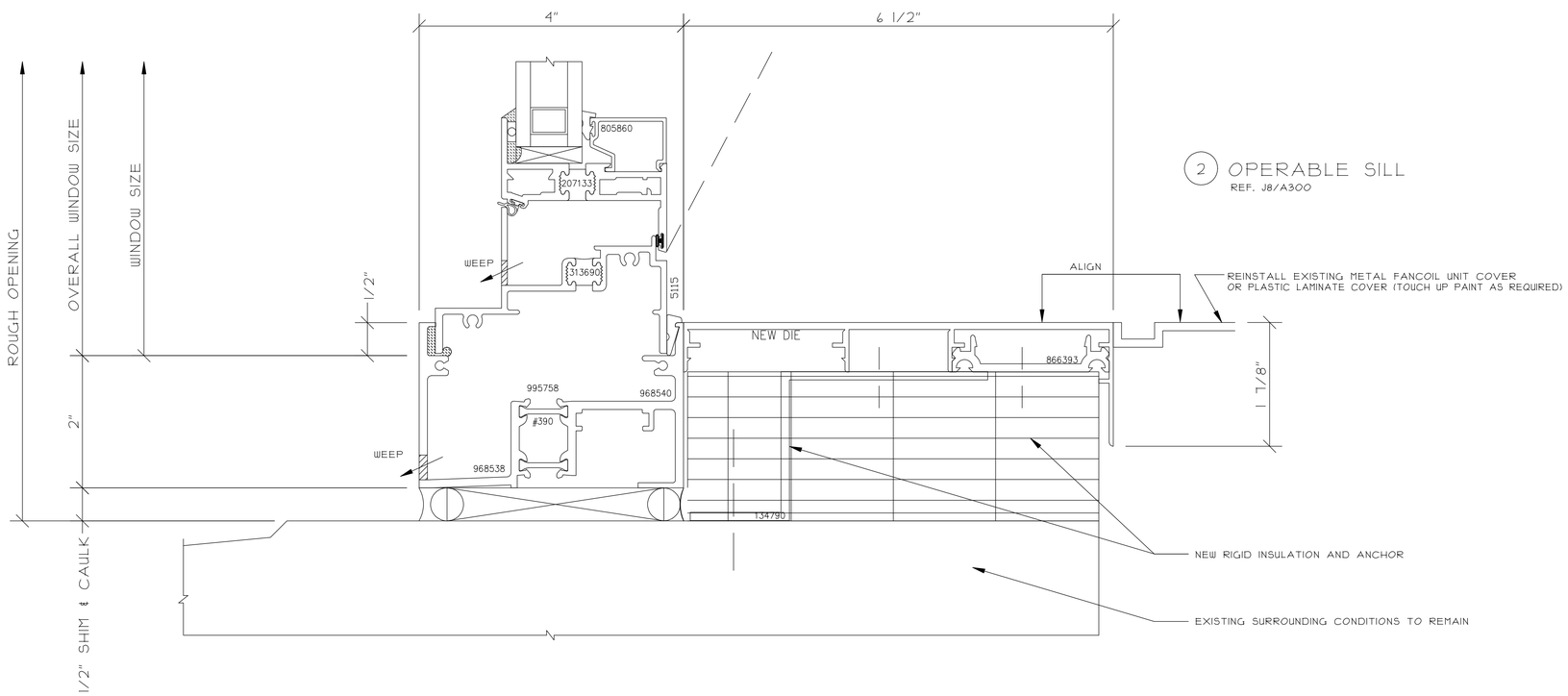

2 OPERABLE SILL
REF. J8/A300

NO.	REVISION DESCRIPTION / ACTION TAKEN	BY	DATE

CONSTRUCTION MANAGER:

ARCHITECT INFO:

PROJECT INFO:

THIS DRAWING INCLUDING THE INFORMATION, DATA AND DESIGN IS CONFIDENTIAL AND THE PROPERTY OF AJAY GLASS CO. IT SHOULD NOT BE COPIED, REPRODUCED OR ITS CONTENTS DIVULGED WITHOUT THE WRITTEN PERMISSION OF AJAY GLASS CO.

TITLE
WINDOW WALL DETAILS

DRAWN BY / DATE
SAMPLE

CHECKED BY / DATE

AJAY PROJECT MANAGER:

SCALE:
12" = 1'-0"

AJAY PROJECT NO.:

DWG NO.:
426

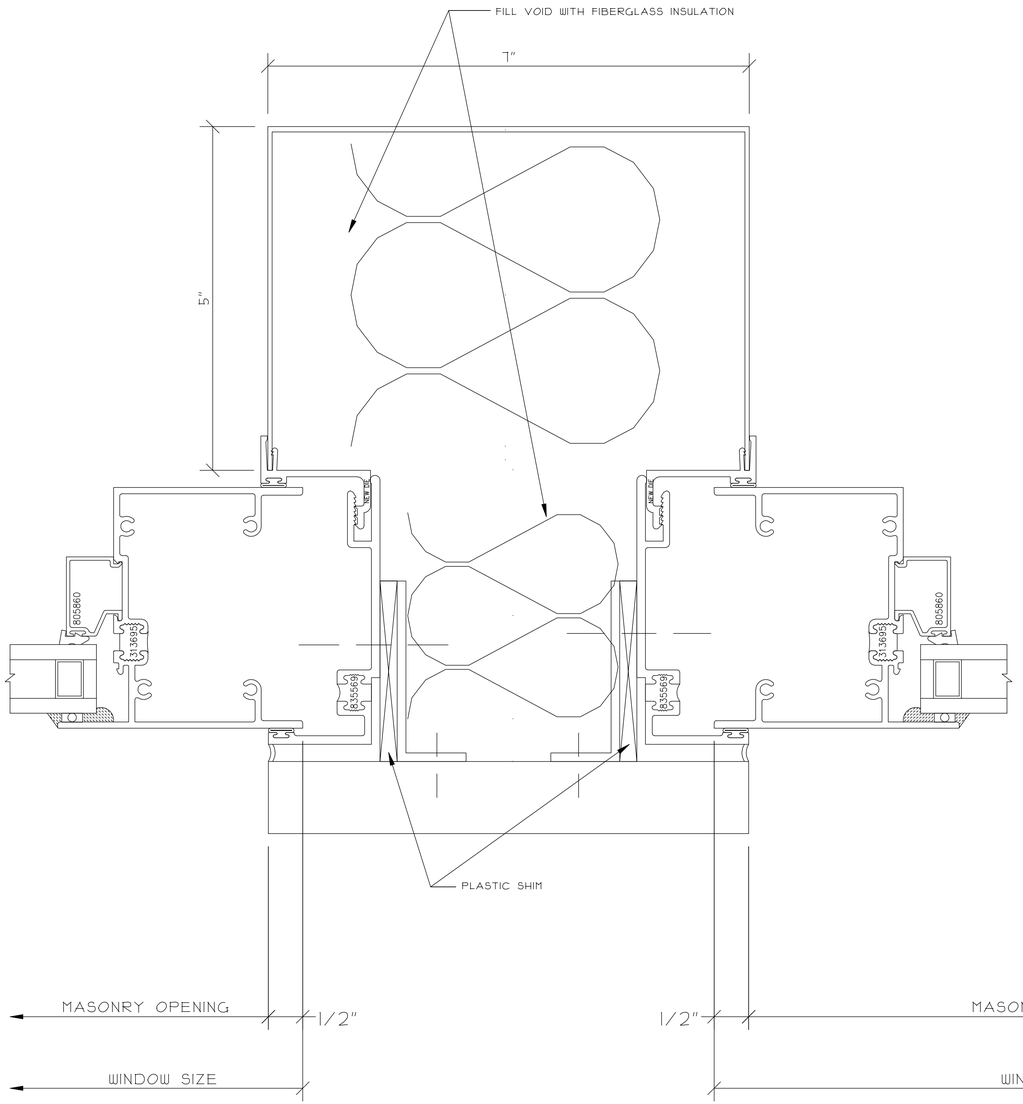

1 FIXED UPPER COLUMN JAMB

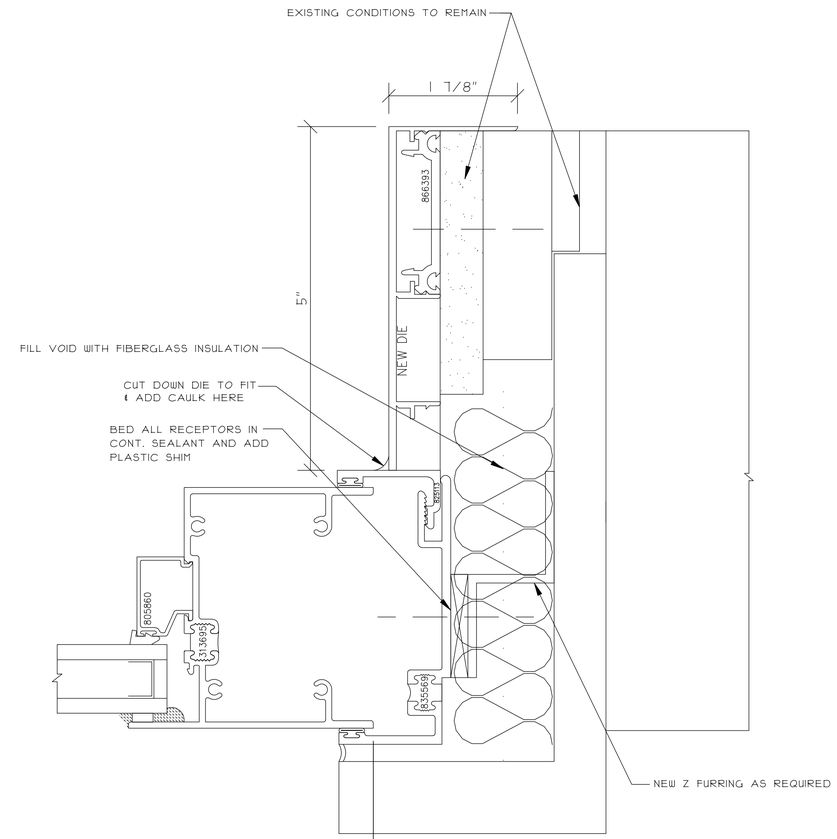

2 FIXED UPPER JAMB
REF. C8/A300

NO.	REVISION DESCRIPTION / ACTION TAKEN	BY	DATE

CONSTRUCTION MANAGER:

ARCHITECT INFO:

PROJECT INFO:

THIS DRAWING, INCLUDING THE INFORMATION, DATA, AND DESIGN IS CONFIDENTIAL AND THE PROPERTY OF AJAY GLASS CO. AND MUST NOT BE COPIED, REPRODUCED OR ITS CONTENTS DIVULGED WITHOUT THE WRITTEN PERMISSION OF AJAY GLASS CO.

TITLE
WINDOW WALL DETAILS

DRAWN BY / DATE
SAMPLE

CHECKED BY / DATE

AJAY PROJECT MANAGER:

SCALE:
12" = 1'-0"

AJAY PROJECT NO.:

DWG NO.:
427

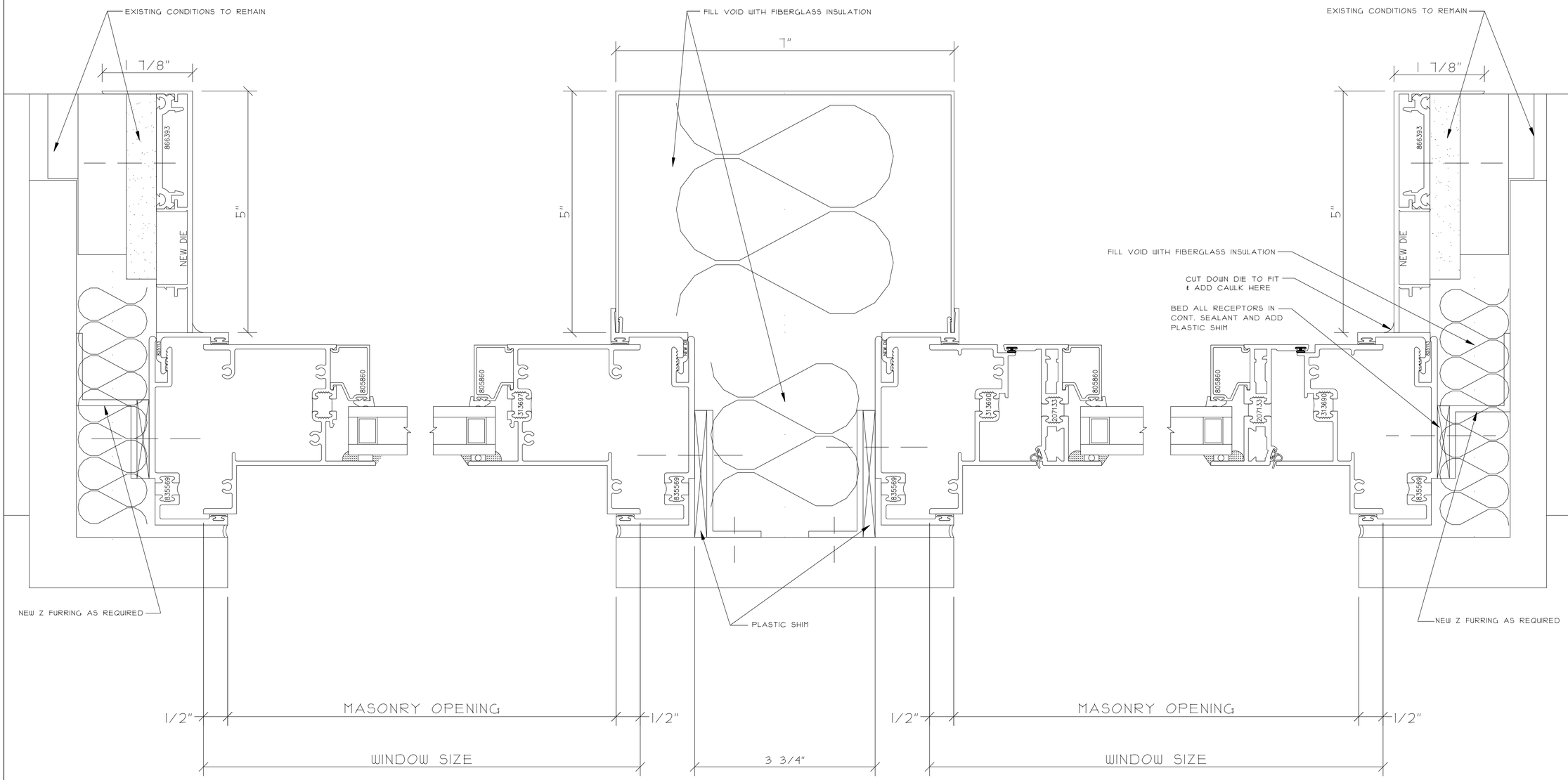

1 FIXED LOWER JAMB

2 FIXED/OPERABLE LOWER COLUMN JAMB
REF. C10/A300

3 OPERABLE JAMB
REF. C12/A300

NO.	REVISION DESCRIPTION / ACTION TAKEN	BY	DATE

CONSTRUCTION MANAGER:

ARCHITECT INFO:

PROJECT INFO:

THIS DRAWING INCLUDING THE INFORMATION, DATA AND DESIGN IS CONFIDENTIAL AND THE PROPERTY OF AJAY GLASS CO. IT MAY NOT BE COPIED, REPRODUCED OR ITS CONTENTS DIVULGED WITHOUT THE WRITTEN PERMISSION OF AJAY GLASS CO.

TITLE
WINDOW WALL DETAILS

DRAWN BY / DATE
SAMPLE

CHECKED BY / DATE

AJAY PROJECT MANAGER:

SCALE:
12" = 1'-0"

AJAY PROJECT NO.:

DWG NO.:
428

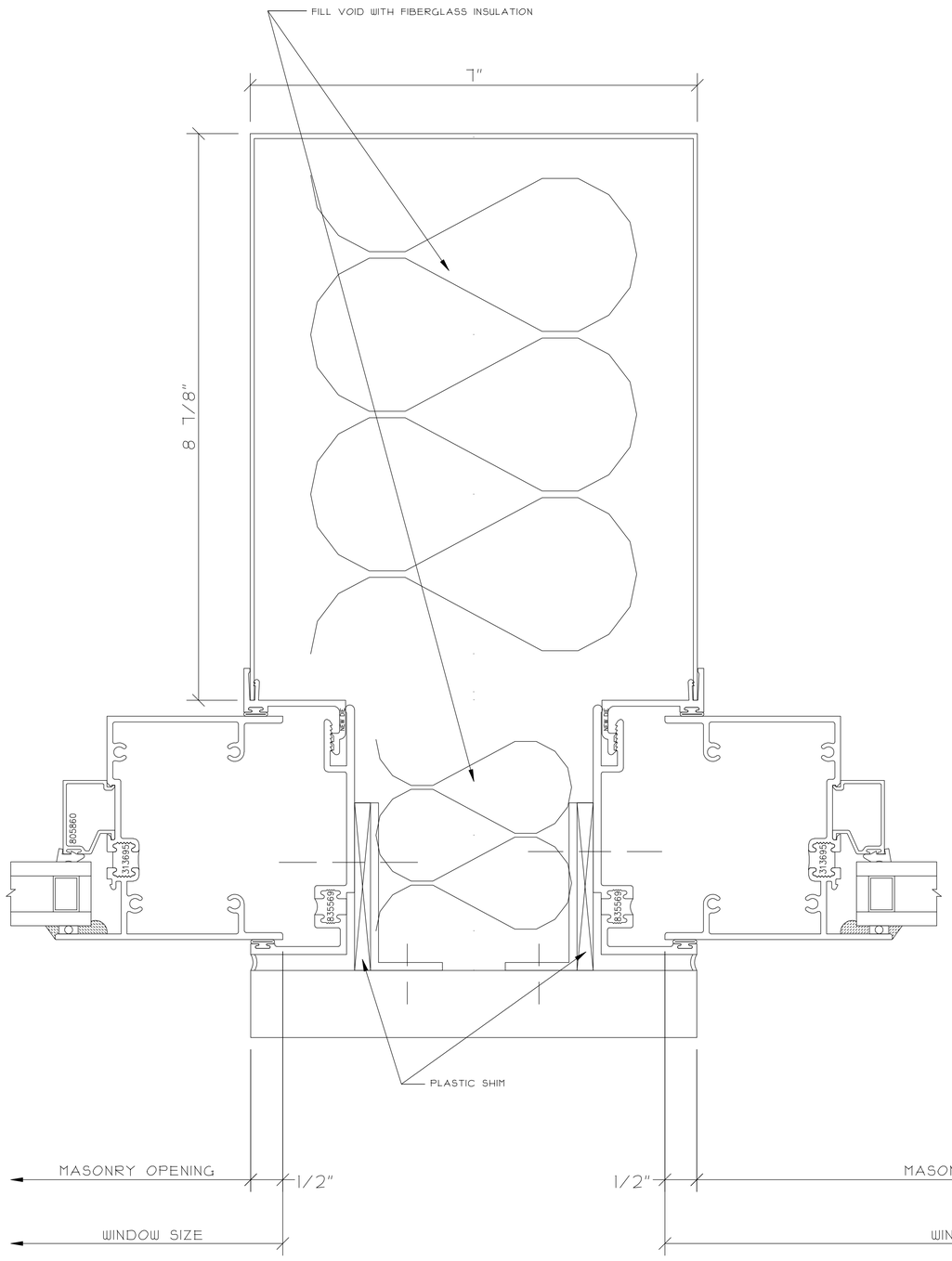

1 FIXED UPPER COLUMN JAMB

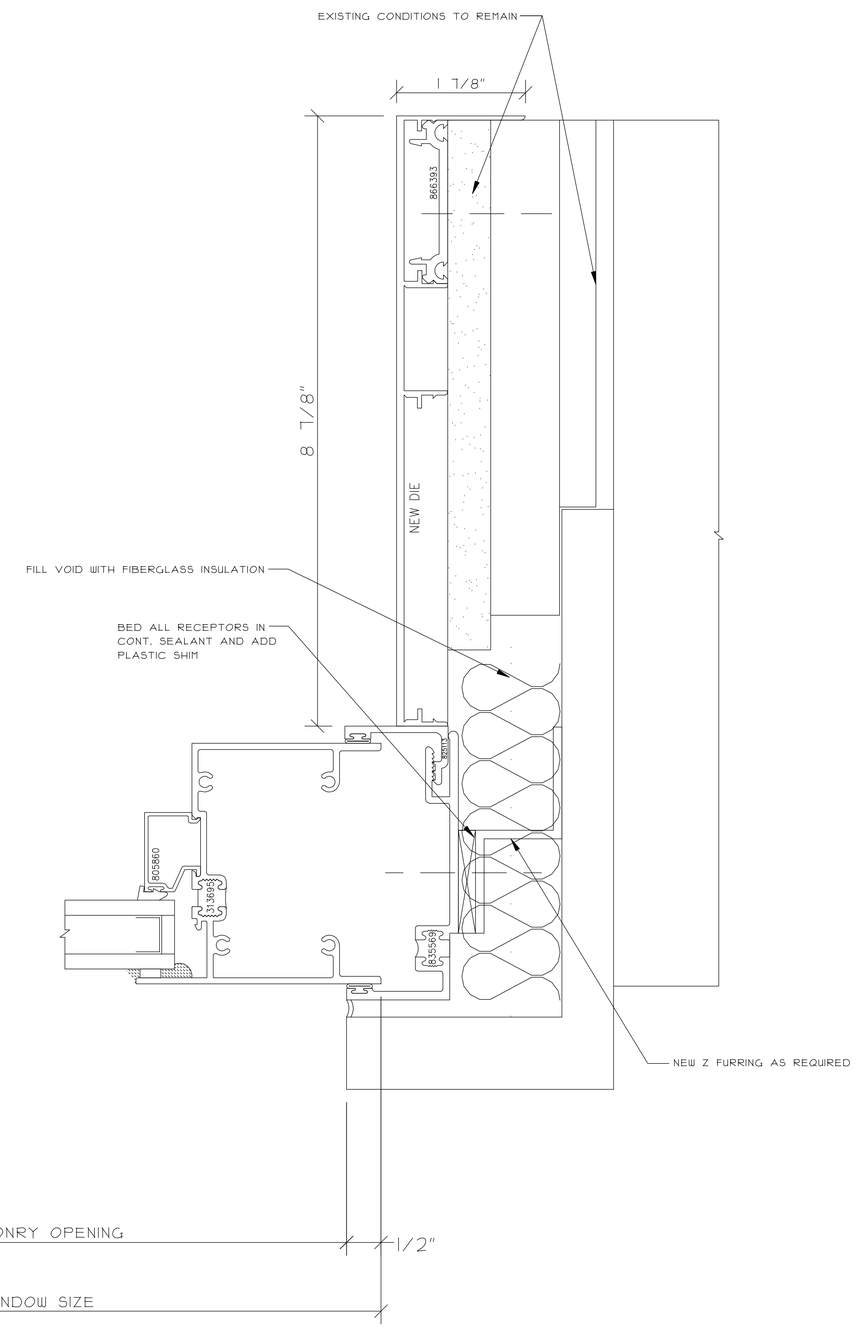

2 FIXED UPPER JAMB
REF. C8/A300

NO.	REVISION DESCRIPTION / ACTION TAKEN	BY	DATE

CONSTRUCTION MANAGER:

ARCHITECT INFO:

PROJECT INFO:

THIS DRAWING INCLUDING THE INFORMATION, DATA AND DESIGN IS CONFIDENTIAL AND THE PROPERTY OF AJAY GLASS CO. IT SHALL NOT BE COPIED, REPRODUCED OR ITS CONTENTS DIVULGED WITHOUT THE WRITTEN PERMISSION OF AJAY GLASS CO.

TITLE
WINDOW WALL DETAILS

DRAWN BY / DATE
SAMPLE

CHECKED BY / DATE

AJAY PROJECT MANAGER:

SCALE:
12" = 1'-0"

AJAY PROJECT NO.:

DWG NO.:
429

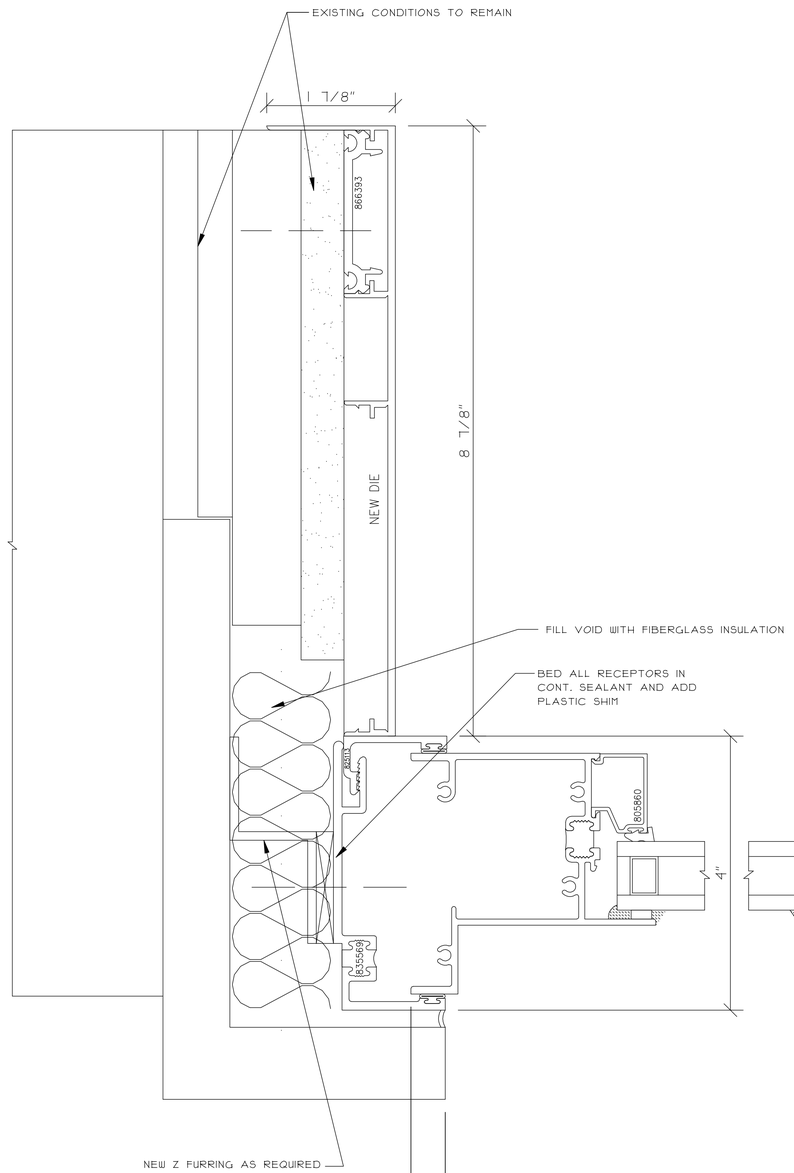

1 FIXED LOWER JAMB

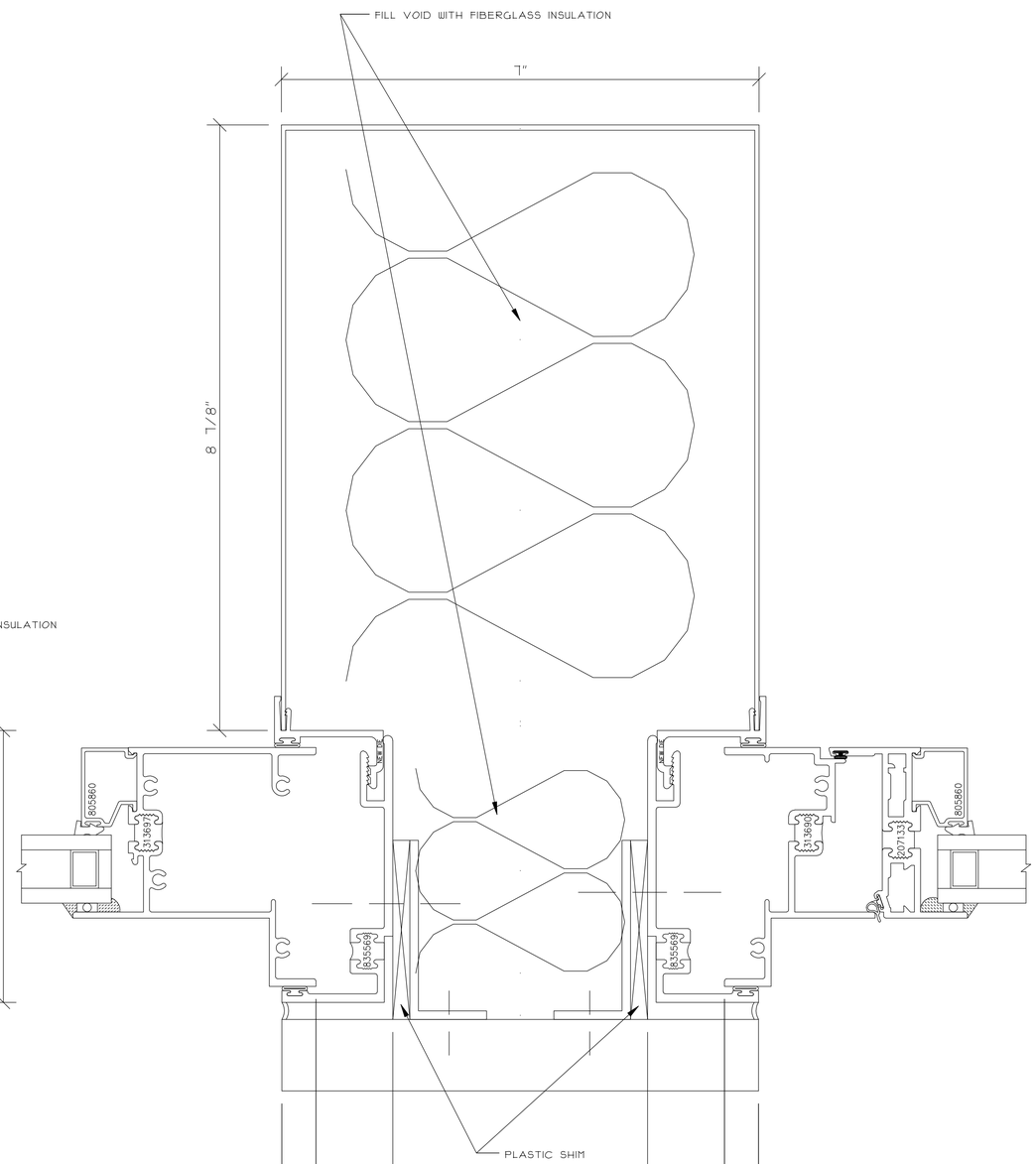

2 FIXED/OPERABLE LOWER COLUMN JAMB

REF. C10/A300

1/2" MASONRY OPENING 1/2"

WINDOW SIZE

3 3/4"

1/2" MASONRY OPENING

WINDOW SIZE

NO.	REVISION DESCRIPTION / ACTION TAKEN	BY	DATE

CONSTRUCTION MANAGER:

ARCHITECT INFO:

PROJECT INFO:

THIS DRAWING INCLUDING THE INFORMATION, DATA AND DESIGN IS CONFIDENTIAL AND THE PROPERTY OF AJAY GLASS CO. IT SHALL NOT BE COPIED, REPRODUCED OR ITS CONTENTS DIVULGED WITHOUT THE WRITTEN PERMISSION OF AJAY GLASS CO.

TITLE: WINDOW WALL DETAILS

DRAWN BY / DATE: SAMPLE

CHECKED BY / DATE:

AJAY PROJECT MANAGER:

SCALE: 12" = 1'-0"

AJAY PROJECT NO.:

DWG NO.: 430

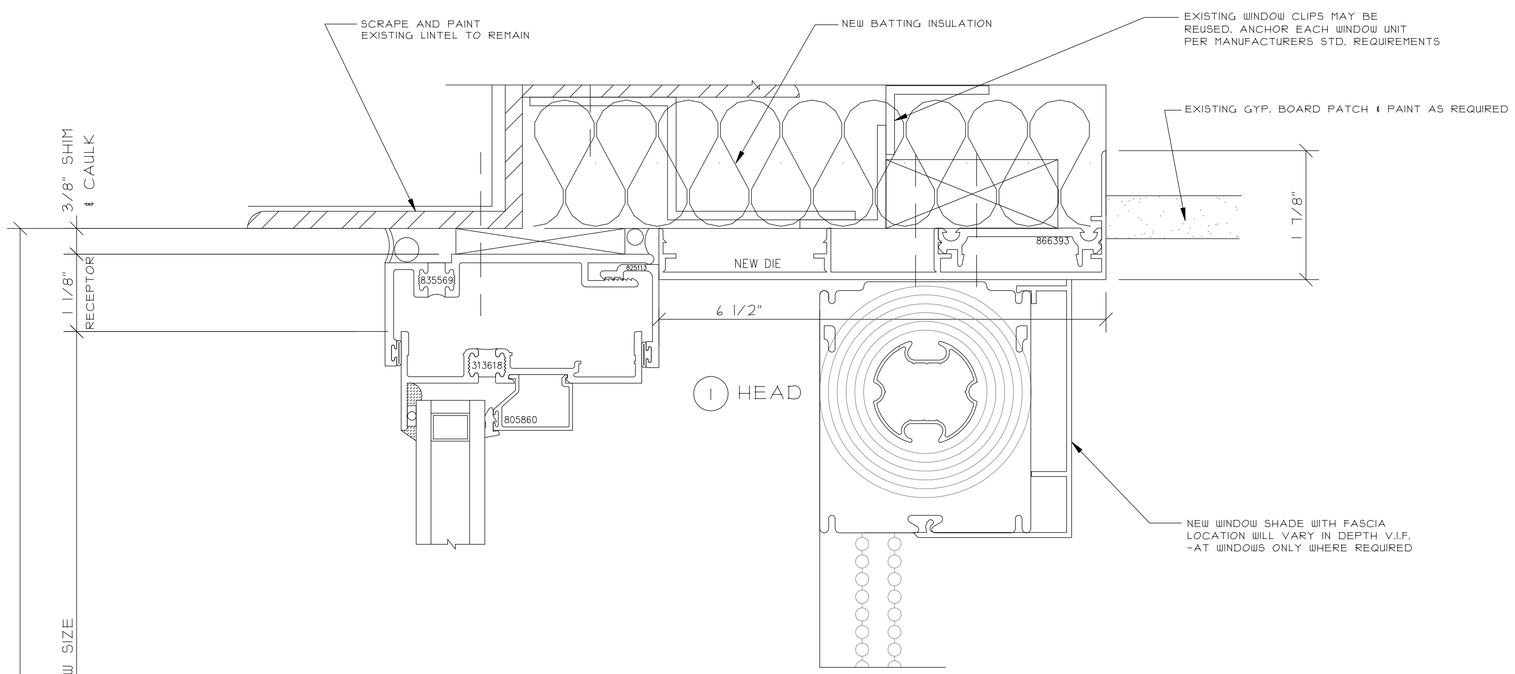

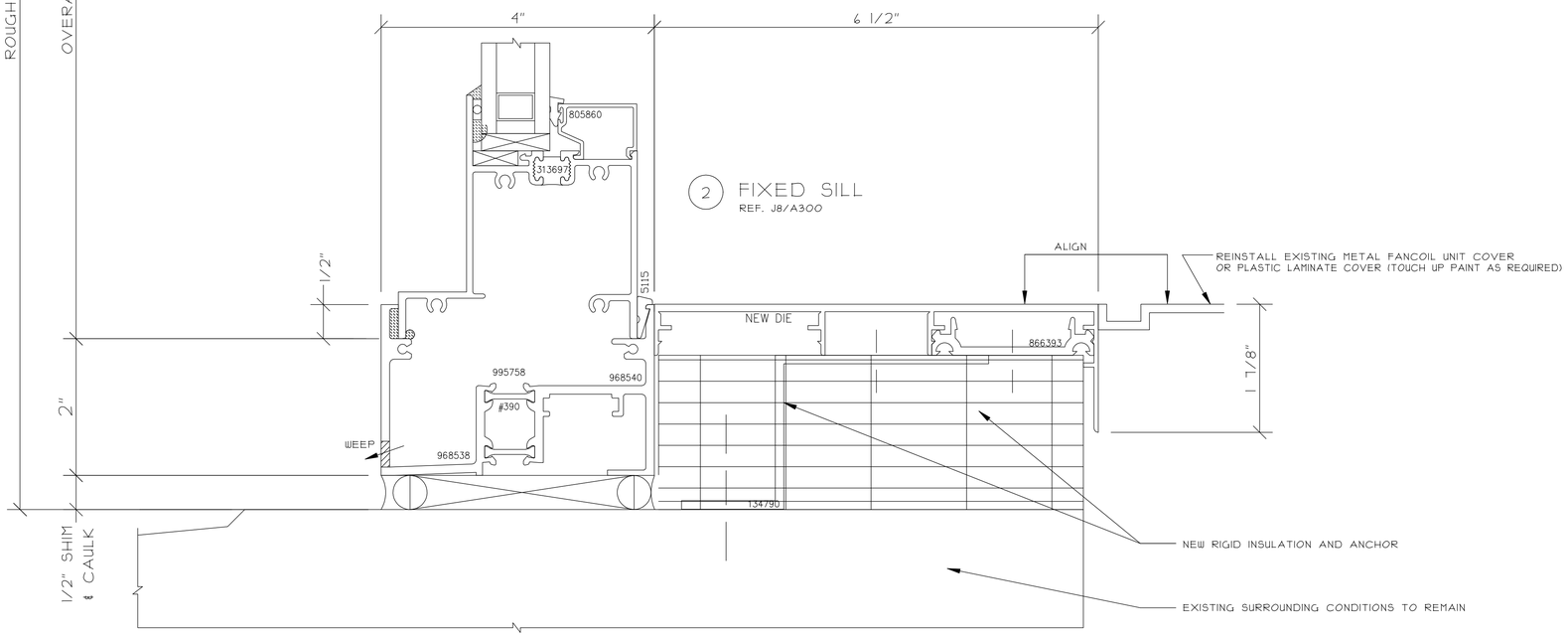

NO.	REVISION DESCRIPTION / ACTION TAKEN	BY	DATE

CONSTRUCTION MANAGER:

ARCHITECT INFO:

PROJECT INFO:

THIS DRAWING INCLUDING THE INFORMATION, DATA AND DESIGN IS CONFIDENTIAL AND THE PROPERTY OF AJAY GLASS CO. IT SHOULD NOT BE COPIED, REPRODUCED OR ITS CONTENTS DIVULGED WITHOUT THE WRITTEN PERMISSION OF AJAY GLASS CO.

TITLE
WINDOW WALL DETAILS

DRAWN BY / DATE
SAMPLE

CHECKED BY / DATE

AJAY PROJECT MANAGER:

SCALE:
12" = 1'-0"

AJAY PROJECT NO.:

DWG NO.:
431

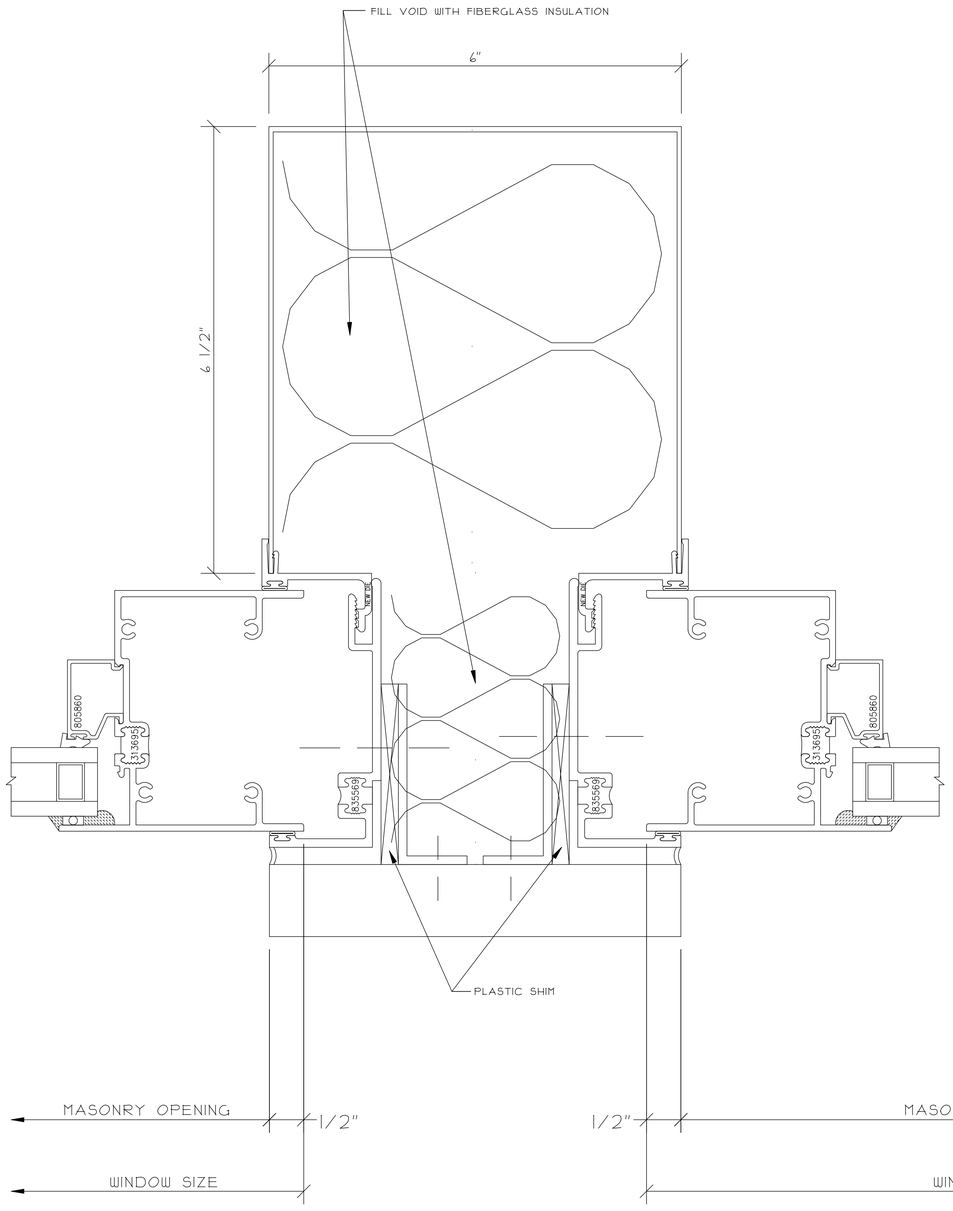

1 FIXED UPPER COLUMN JAMB

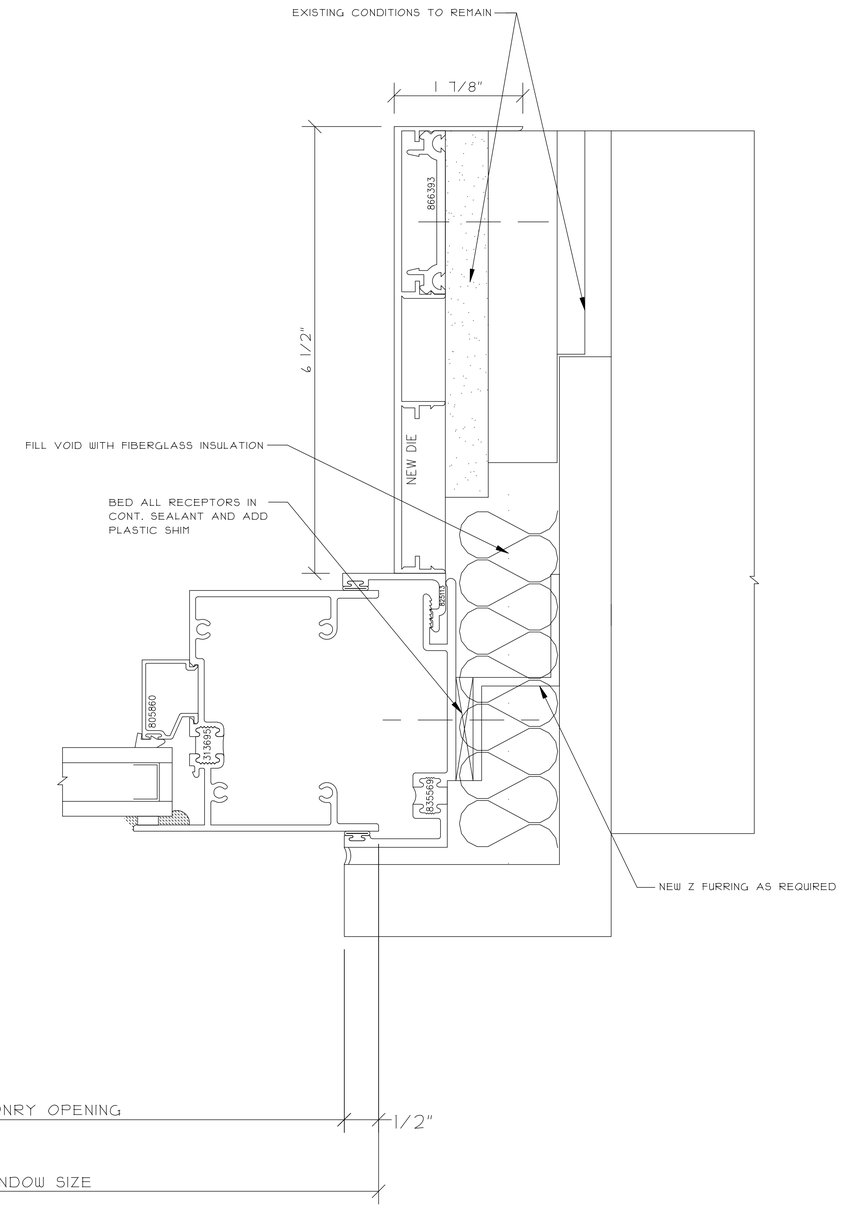

2 FIXED UPPER JAMB
REF. C8/A300

NO.	REVISION DESCRIPTION / ACTION TAKEN	BY	DATE

CONSTRUCTION MANAGER:

ARCHITECT INFO:

PROJECT INFO:

THIS DRAWING, INCLUDING THE INFORMATION, DATA, AND DESIGN IS CONFIDENTIAL AND THE PROPERTY OF AJAY GLASS CO. IT IS NOT TO BE COPIED, REPRODUCED OR ITS CONTENTS DIVULGED WITHOUT THE WRITTEN PERMISSION OF AJAY GLASS CO.

TITLE
WINDOW WALL DETAILS

DRAWN BY / DATE
SAMPLE

CHECKED BY / DATE

AJAY PROJECT MANAGER:

SCALE:
12" = 1'-0"

AJAY PROJECT NO.:

DWG NO.:
432

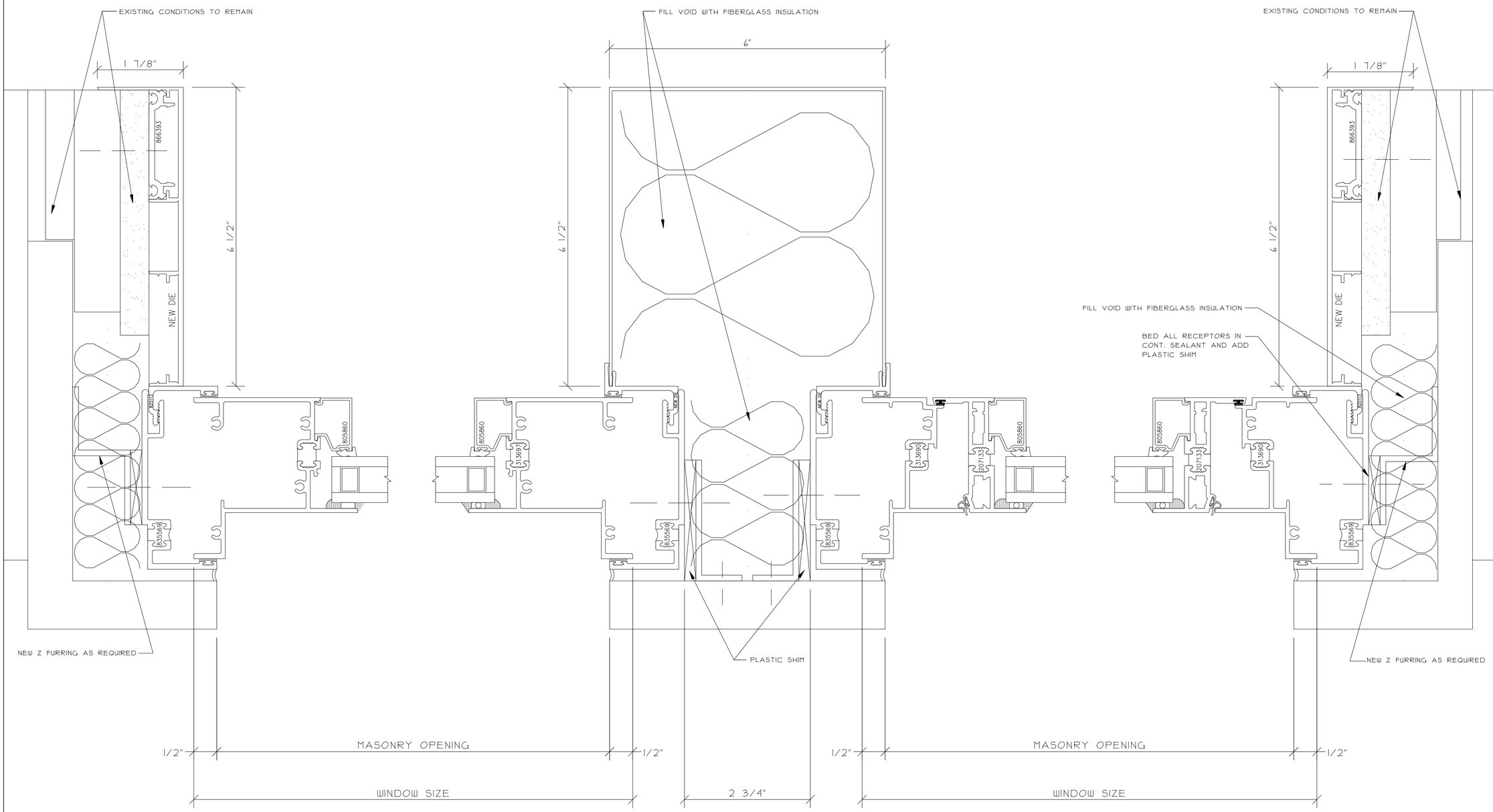

1 FIXED LOWER JAMB

2 FIXED/OPERABLE LOWER COLUMN JAMB
REF. C10/A300

3 OPERABLE JAMB
REF. C12/A300

NO.	REVISION DESCRIPTION / ACTION TAKEN	BY	DATE

CONSTRUCTION MANAGER:

ARCHITECT INFO:

PROJECT INFO:

THIS DRAWING INCLUDING THE INFORMATION, DATA AND DESIGN IS CONFIDENTIAL AND THE PROPERTY OF AJAY GLASS CO. IT MAY NOT BE COPIED, REPRODUCED OR ITS CONTENTS DIVULGED WITHOUT THE WRITTEN PERMISSION OF AJAY GLASS CO.

TITLE
WINDOW WALL DETAILS

DRAWN BY / DATE
SAMPLE

CHECKED BY / DATE

AJAY PROJECT MANAGER:

SCALE:
12" = 1'-0"

AJAY PROJECT NO.:

DWG NO.:
433

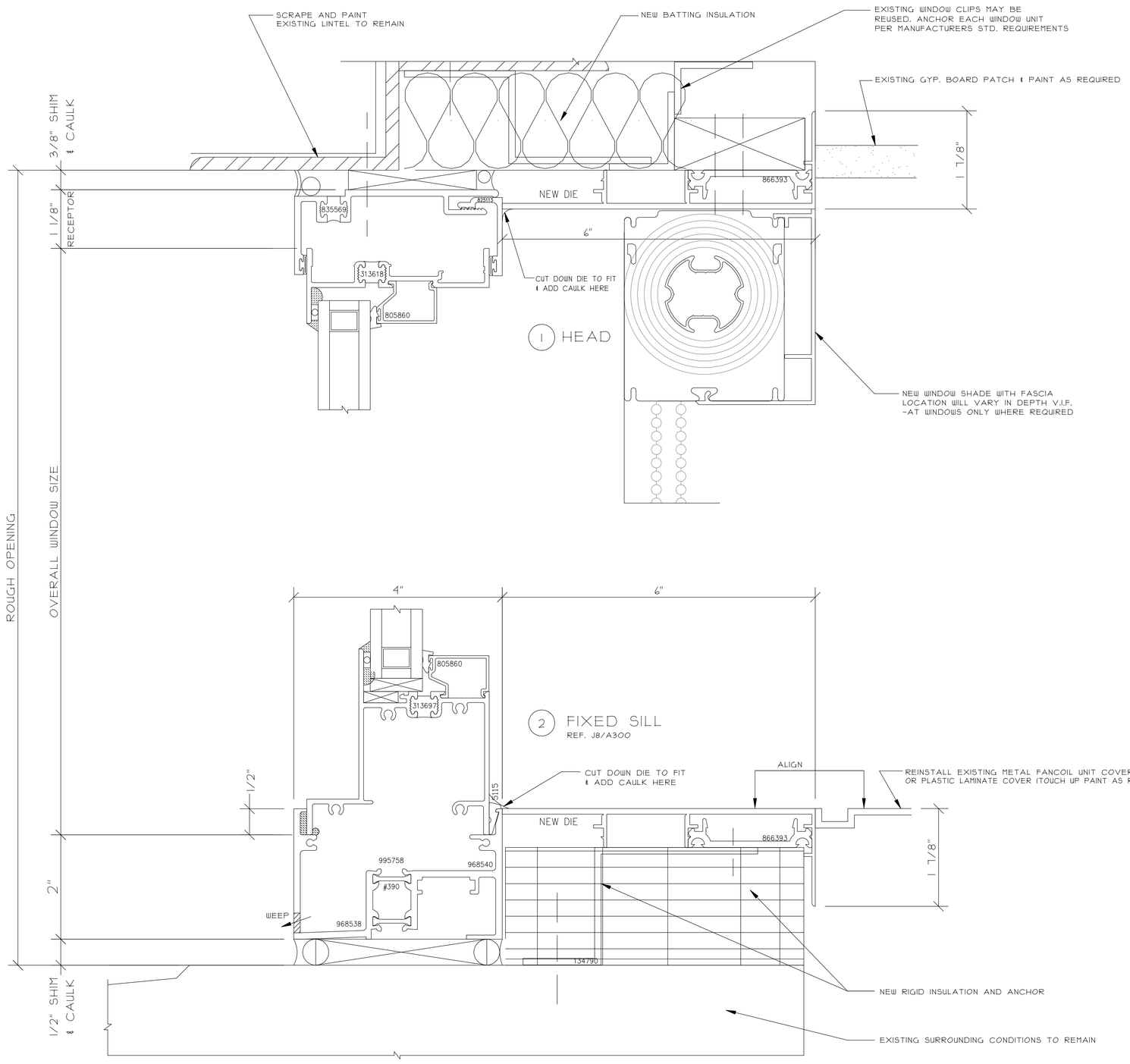

NO.	REVISION DESCRIPTION / ACTION TAKEN	BY	DATE

CONSTRUCTION MANAGER:

ARCHITECT INFO:

PROJECT INFO:

THIS DRAWING INCLUDING THE INFORMATION, DATA AND DESIGN IS CONFIDENTIAL AND THE PROPERTY OF AJAY GLASS CO. IT IS NOT TO BE COPIED, REPRODUCED OR ITS CONTENTS DIVULGED WITHOUT THE WRITTEN PERMISSION OF AJAY GLASS CO.

TITLE
WINDOW WALL DETAILS

DRAWN BY / DATE
SAMPLE

CHECKED BY / DATE

AJAY PROJECT MANAGER:

SCALE:
12" = 1'-0"

AJAY PROJECT NO.:

DWG NO.:
434

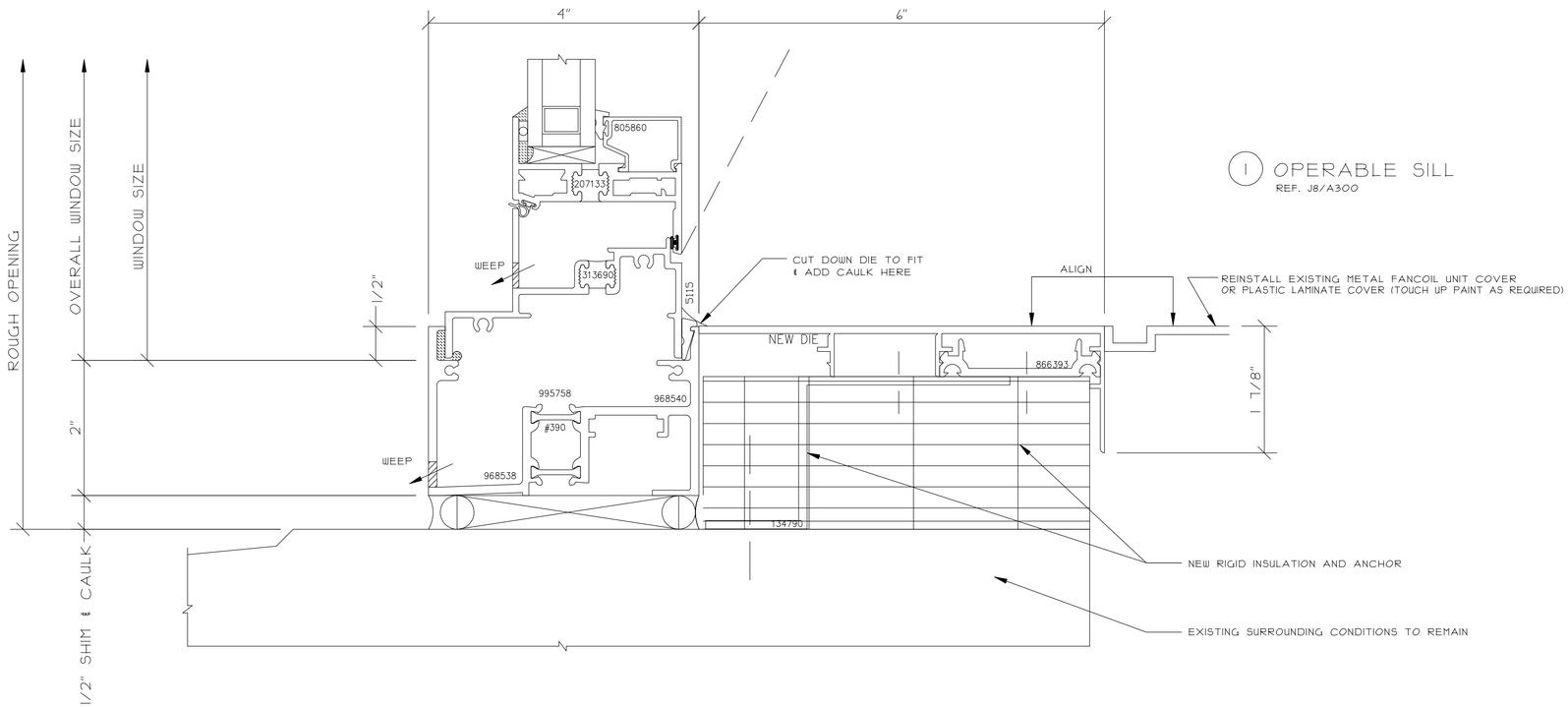

1 OPERABLE SILL
REF. J8/A300

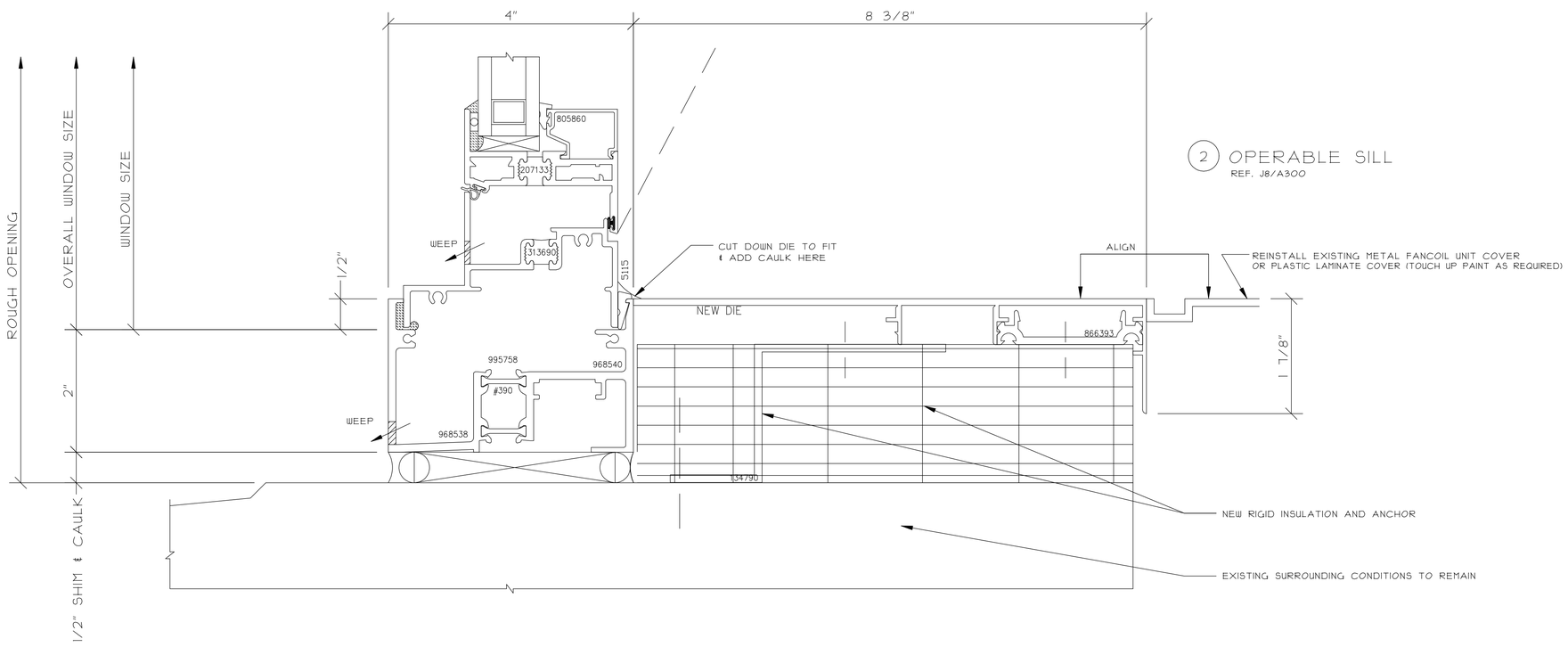

2 OPERABLE SILL
REF. J8/A300

NO.	REVISION DESCRIPTION / ACTION TAKEN	BY	DATE

CONSTRUCTION MANAGER:

ARCHITECT INFO:

PROJECT INFO:

THIS DRAWING INCLUDING THE INFORMATION, DATA AND DESIGN IS CONFIDENTIAL AND THE PROPERTY OF AJAY GLASS CO. IT IS NOT TO BE COPIED, REPRODUCED OR ITS CONTENTS DIVULGED WITHOUT THE WRITTEN PERMISSION OF AJAY GLASS CO.

TITLE
WINDOW WALL DETAILS

DRAWN BY / DATE
SAMPLE

CHECKED BY / DATE

AJAY PROJECT MANAGER:

SCALE:
12" = 1'-0"

AJAY PROJECT NO.:

DWG NO.:
435

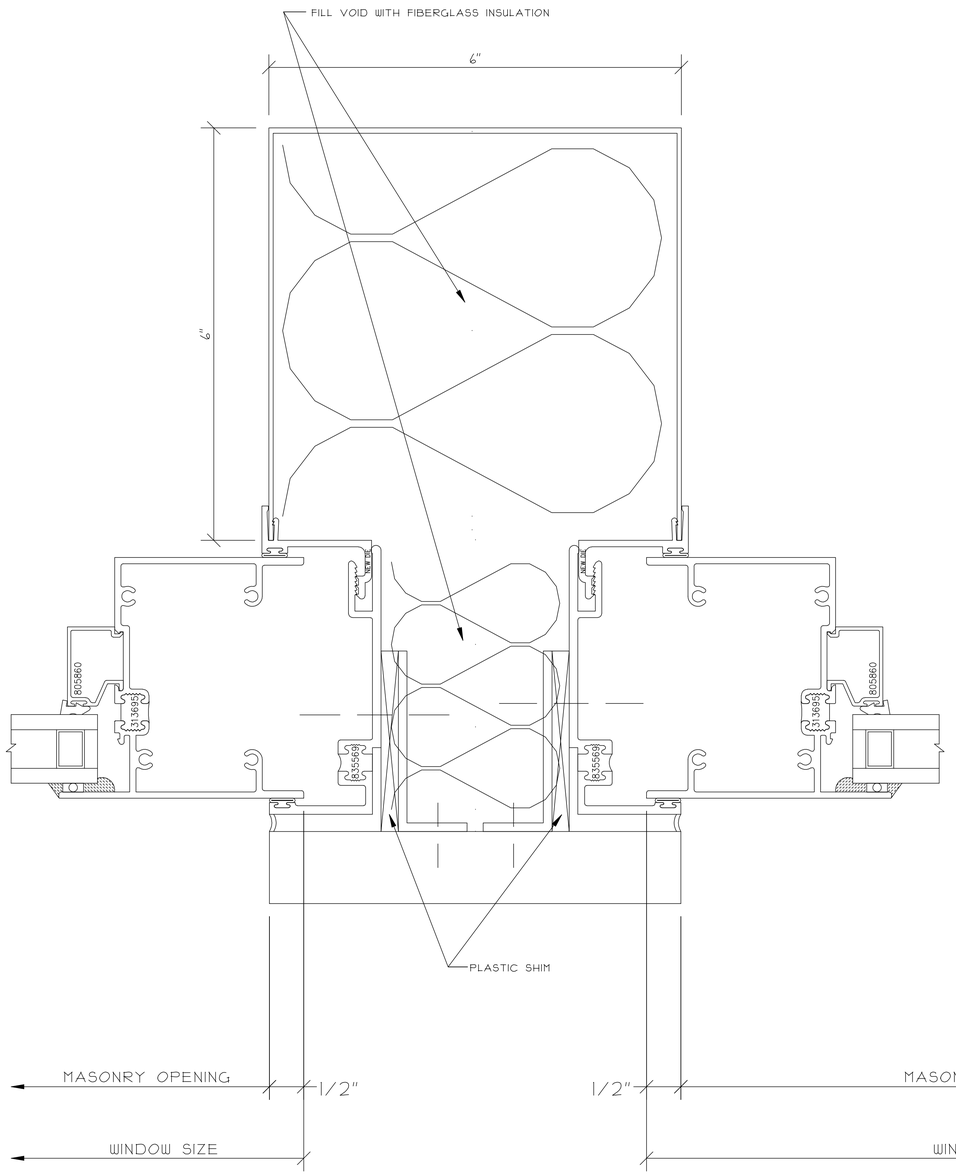

1 FIXED UPPER COLUMN JAMB

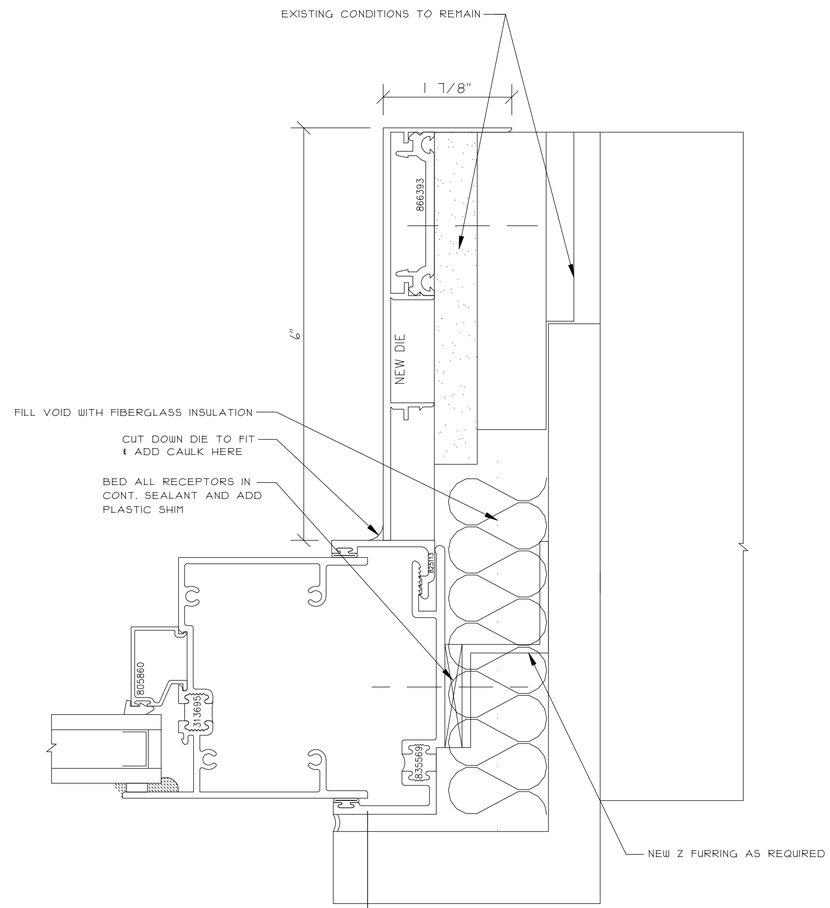

2 FIXED UPPER JAMB
REF. C8/A300

NO.	REVISION DESCRIPTION / ACTION TAKEN	BY	DATE

CONSTRUCTION MANAGER:

ARCHITECT INFO:

PROJECT INFO:

THIS DRAWING INCLUDING THE INFORMATION, DATA AND DESIGN IS CONFIDENTIAL AND THE PROPERTY OF AJAY GLASS CO. IT IS NOT TO BE COPIED, REPRODUCED OR ITS CONTENTS DIVULGED WITHOUT THE WRITTEN PERMISSION OF AJAY GLASS CO.

TITLE
WINDOW WALL DETAILS

DRAWN BY / DATE
SAMPLE

CHECKED BY / DATE

AJAY PROJECT MANAGER:

SCALE:
12" = 1'-0"

AJAY PROJECT NO.:

DWG NO.:
436

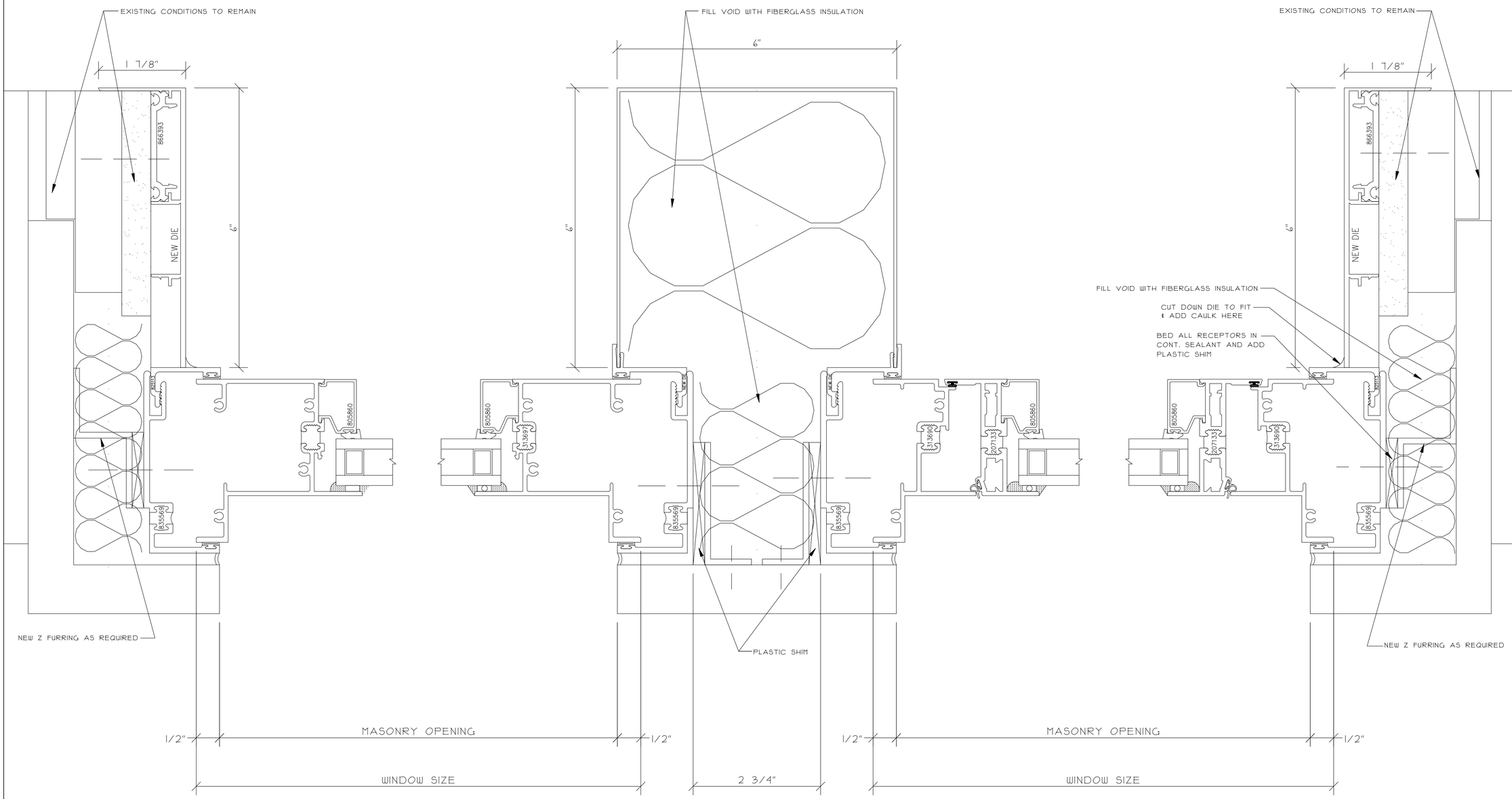

1 FIXED LOWER JAMB

2 FIXED/OPERABLE LOWER COLUMN JAMB
REF. C10/A300

3 OPERABLE JAMB
REF. C12/A300

NO.	REVISION DESCRIPTION / ACTION TAKEN	BY	DATE

CONSTRUCTION MANAGER:

ARCHITECT INFO:

PROJECT INFO:

THIS DRAWING INCLUDING THE INFORMATION, DATA AND DESIGN IS CONFIDENTIAL AND THE PROPERTY OF AJAY GLASS CO. IT MAY NOT BE COPIED, REPRODUCED OR ITS CONTENTS DIVULGED WITHOUT THE WRITTEN PERMISSION OF AJAY GLASS CO.

TITLE
WINDOW WALL DETAILS

DRAWN BY / DATE
SAMPLE

CHECKED BY / DATE

AJAY PROJECT MANAGER:

SCALE:
12" = 1'-0"

AJAY PROJECT NO.:

DWG NO.:
437

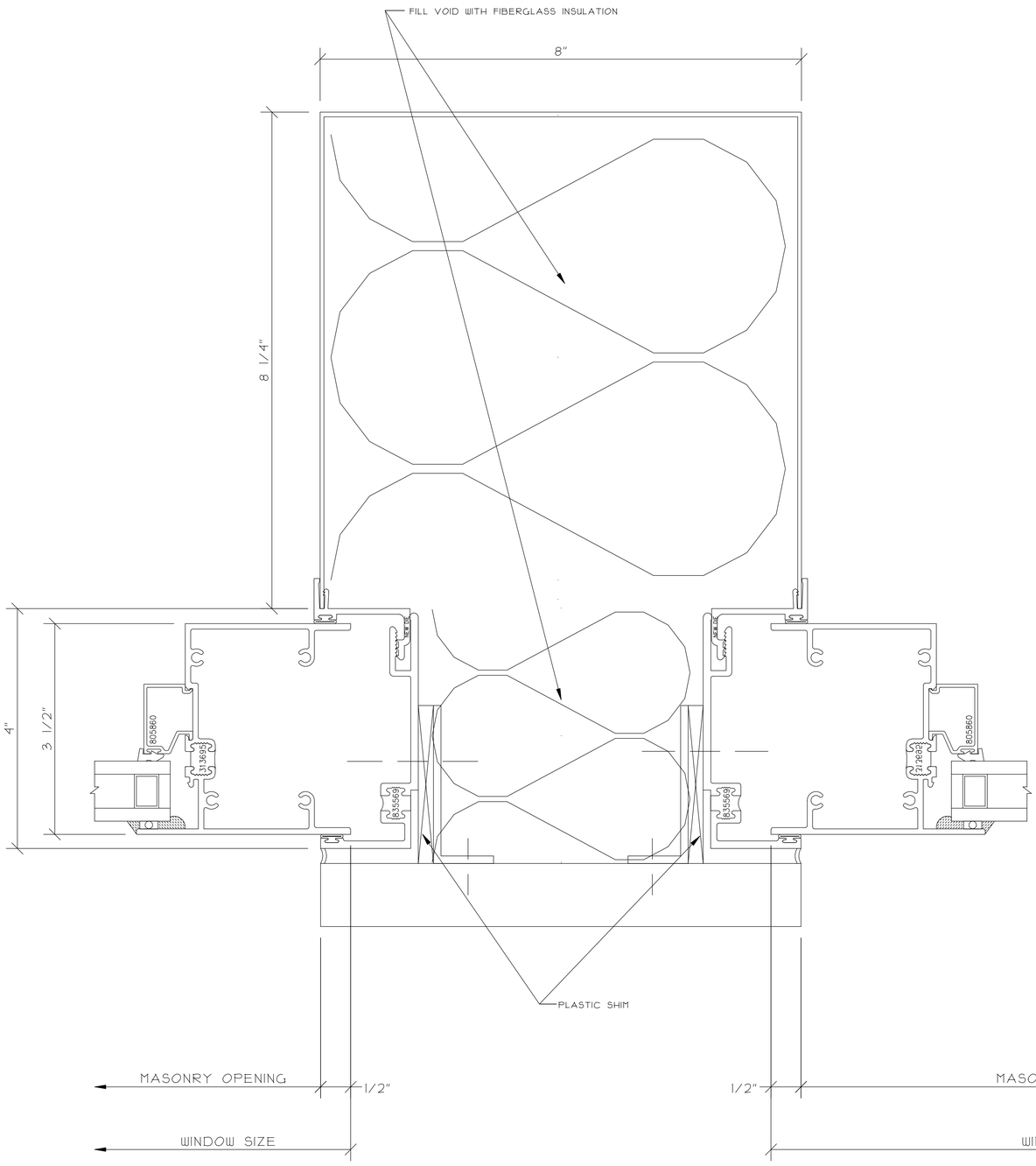

1 FIXED UPPER COLUMN JAMB

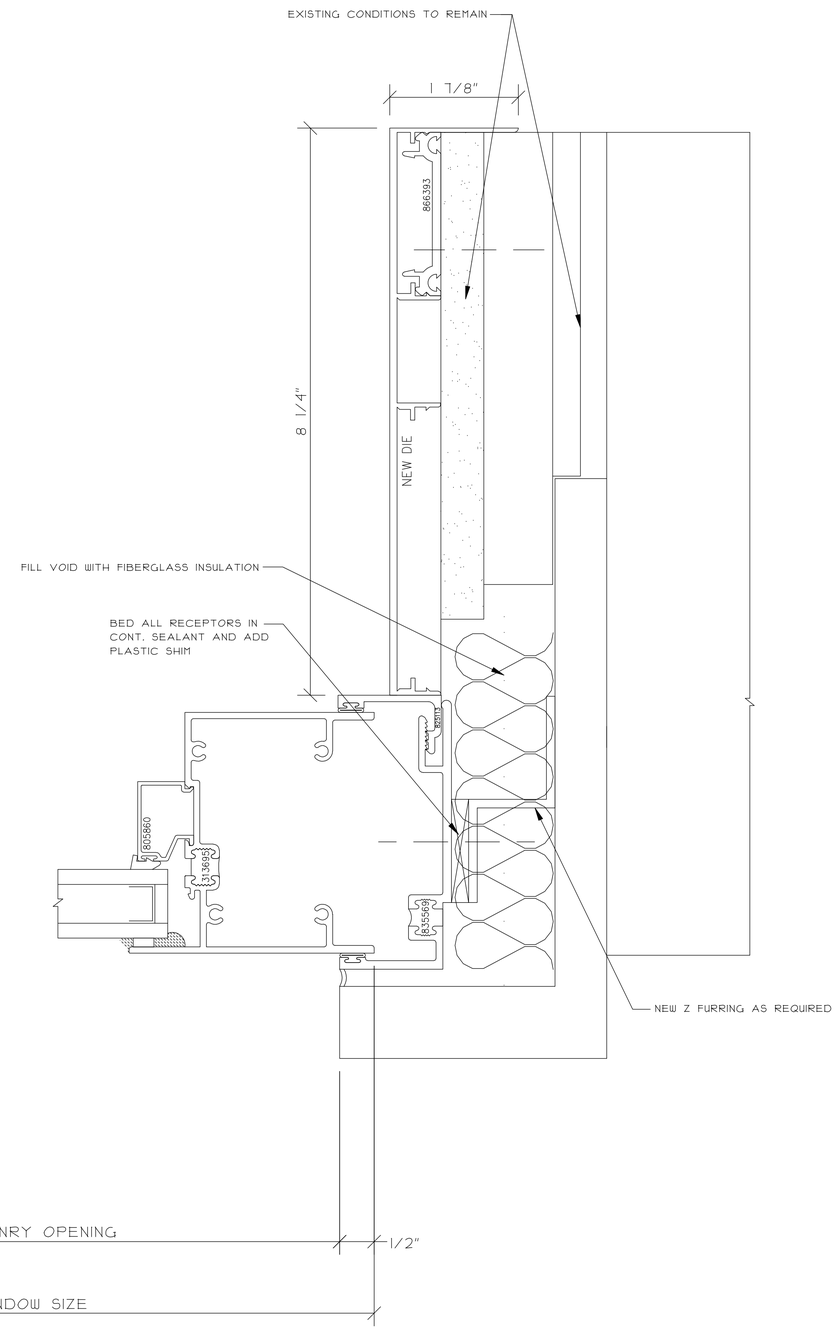

2 FIXED UPPER JAMB
REF. C8/A300

NO.	REVISION DESCRIPTION / ACTION TAKEN	BY	DATE

CONSTRUCTION MANAGER:

ARCHITECT INFO:

PROJECT INFO:

THIS DRAWING, INCLUDING THE INFORMATION, DATA AND DESIGN IS CONFIDENTIAL AND THE PROPERTY OF AJAY GLASS CO. IT IS NOT TO BE COPIED, REPRODUCED OR ITS CONTENTS DIVULGED WITHOUT THE WRITTEN PERMISSION OF AJAY GLASS CO.

TITLE
WINDOW WALL DETAILS

DRAWN BY / DATE
SAMPLE

CHECKED BY / DATE

AJAY PROJECT MANAGER:

SCALE:
12" = 1'-0"

AJAY PROJECT NO.:

DWG NO.:
438

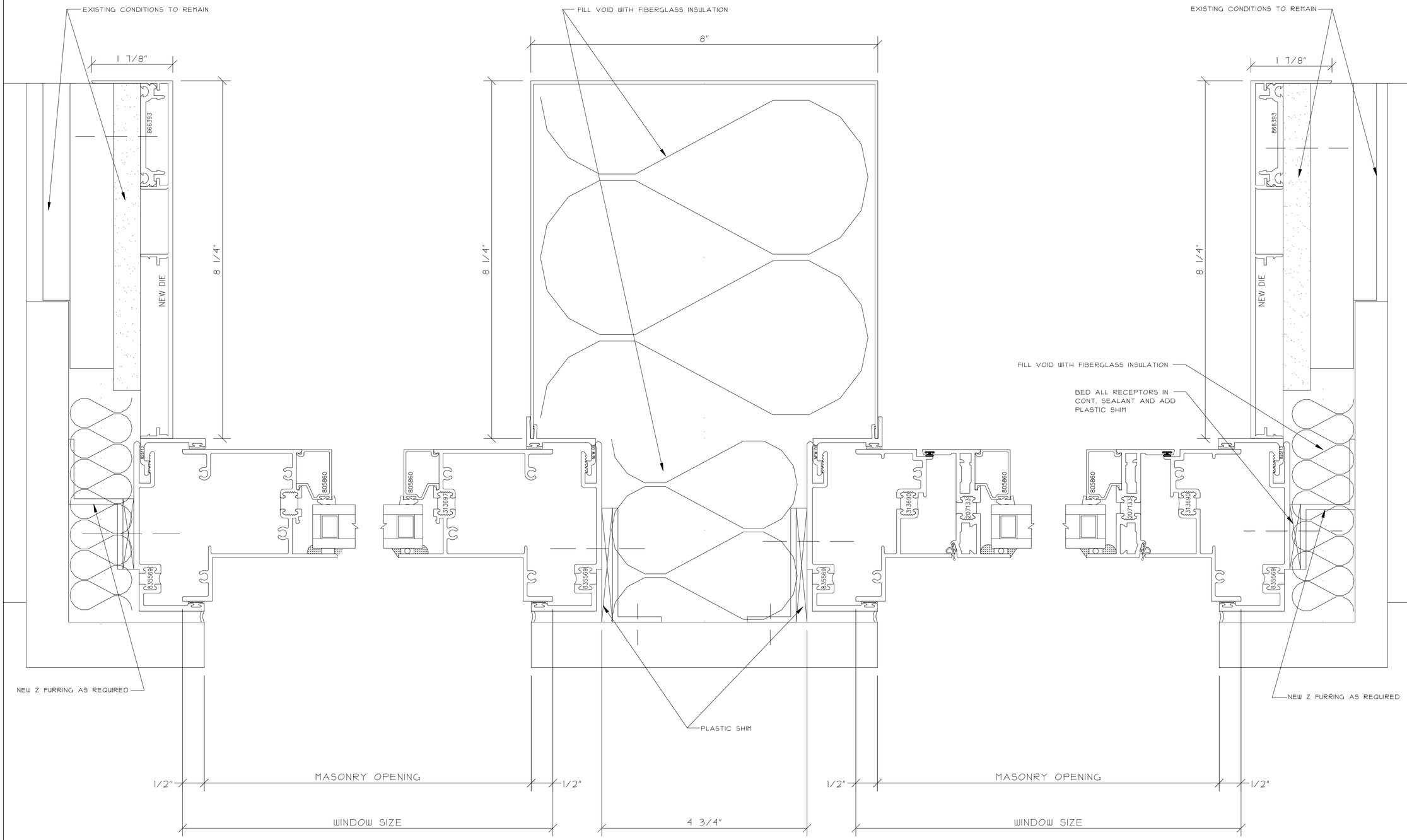

1 FIXED LOWER JAMB

2 FIXED/OPERABLE LOWER COLUMN JAMB
REF. C10/A300

3 OPERABLE JAMB
REF. C12/A300

NO.	REVISION DESCRIPTION / ACTION TAKEN	BY	DATE

CONSTRUCTION MANAGER:

ARCHITECT INFO:

PROJECT INFO:

THIS DRAWING INCLUDING THE INFORMATION, DATA AND DESIGN IS CONFIDENTIAL AND THE PROPERTY OF AJAX GLASS CO. IT MAY NOT BE REPRODUCED OR USED FOR ITS CONTENTS DIVULGED WITHOUT THE WRITTEN PERMISSION OF AJAX GLASS CO.

TITLE
WINDOW WALL DETAILS

DRAWN BY / DATE
SAMPLE

CHECKED BY / DATE

AJAX PROJECT MANAGER:

SCALE:
12" = 1'-0"

AJAX PROJECT NO.:

DWG NO.:
439

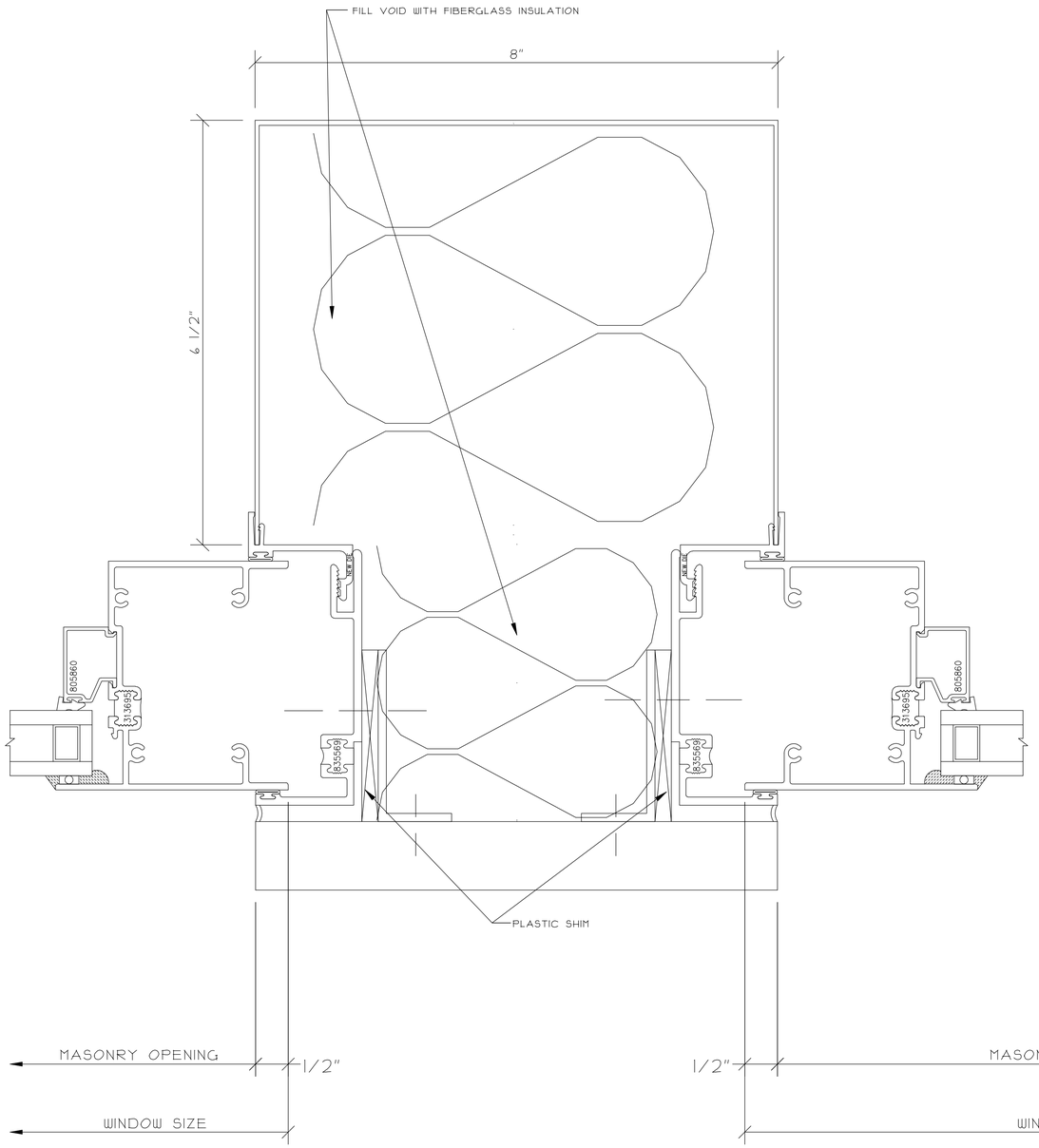

1 FIXED UPPER COLUMN JAMB

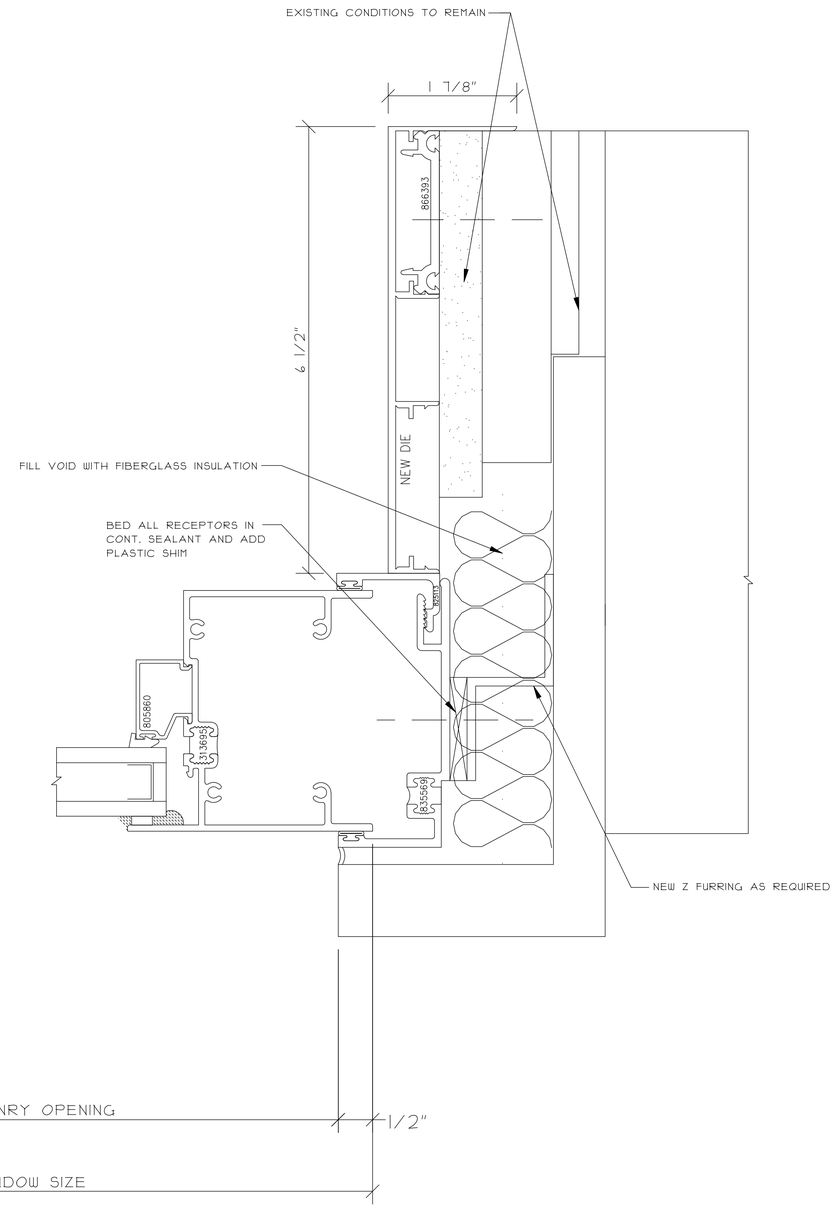

2 FIXED UPPER JAMB
REF. C8/A300

NO.	REVISION DESCRIPTION / ACTION TAKEN	BY	DATE

CONSTRUCTION MANAGER:

ARCHITECT INFO:

PROJECT INFO:

THIS DRAWING, INCLUDING THE INFORMATION, DATA, AND DESIGN IS CONFIDENTIAL AND THE PROPERTY OF AJAY GLASS CO. IT IS NOT TO BE COPIED, REPRODUCED OR ITS CONTENTS DIVULGED WITHOUT THE WRITTEN PERMISSION OF AJAY GLASS CO.

TITLE
WINDOW WALL DETAILS

DRAWN BY / DATE
SAMPLE

CHECKED BY / DATE

AJAY PROJECT MANAGER:

SCALE:
12" = 1'-0"

AJAY PROJECT NO.:

DWG NO.:
440

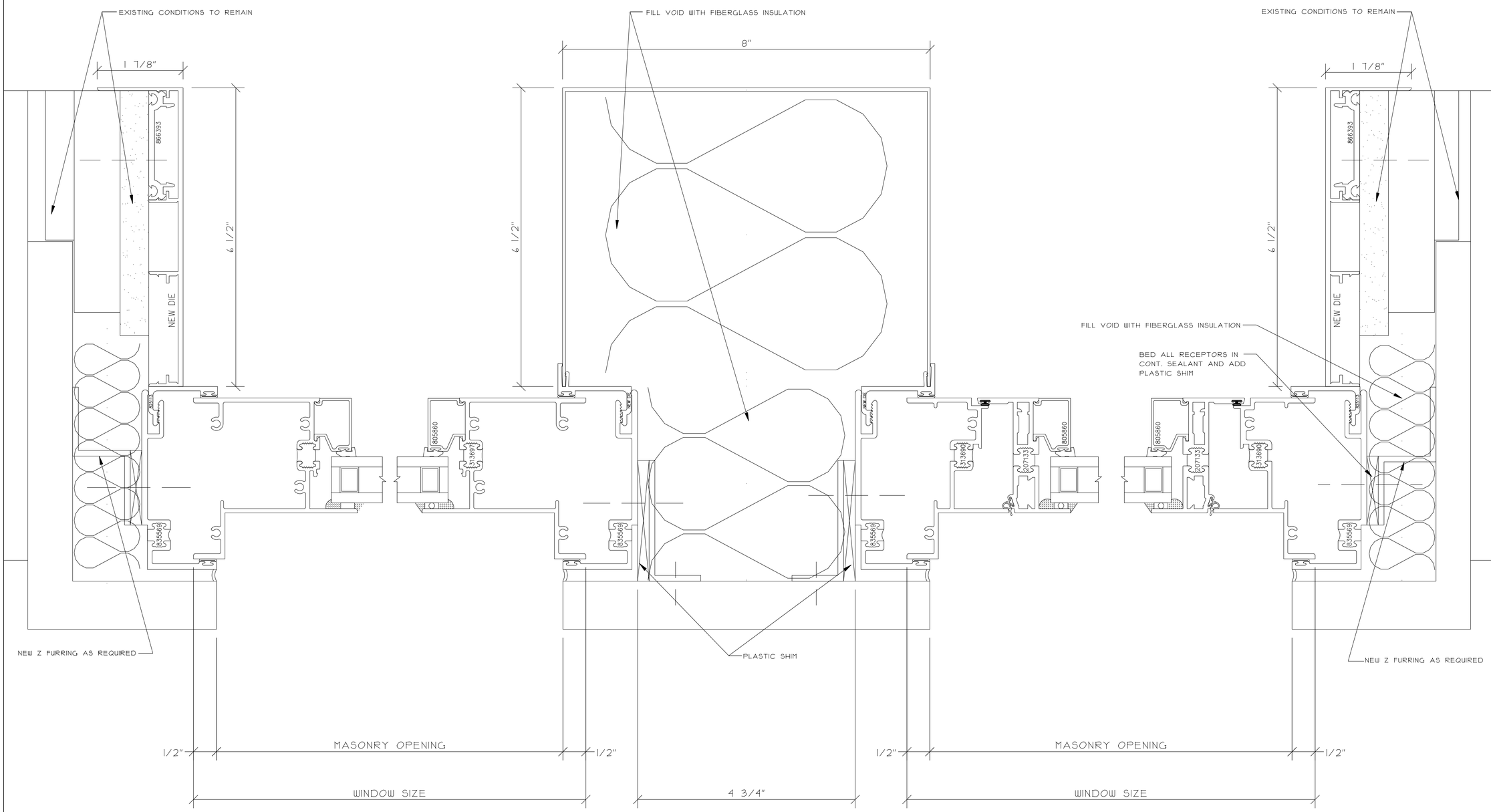

1 FIXED LOWER JAMB

2 FIXED/OPERABLE LOWER COLUMN JAMB
REF. C10/A300

3 OPERABLE JAMB
REF. C12/A300

NO.	REVISION DESCRIPTION / ACTION TAKEN	BY	DATE

CONSTRUCTION MANAGER:

ARCHITECT INFO:

PROJECT INFO:

THIS DRAWING INCLUDING THE INFORMATION, DATA AND DESIGN IS CONFIDENTIAL AND THE PROPERTY OF AJAX GLASS CO. IT MAY NOT BE REPRODUCED OR USED FOR ITS CONTENTS DIVULGED WITHOUT THE WRITTEN PERMISSION OF AJAX GLASS CO.

TITLE
WINDOW WALL DETAILS

DRAWN BY / DATE
SAMPLE

CHECKED BY / DATE

AJAX PROJECT MANAGER:

SCALE:
12" = 1'-0"

AJAX PROJECT NO.:

DWG NO.:
441

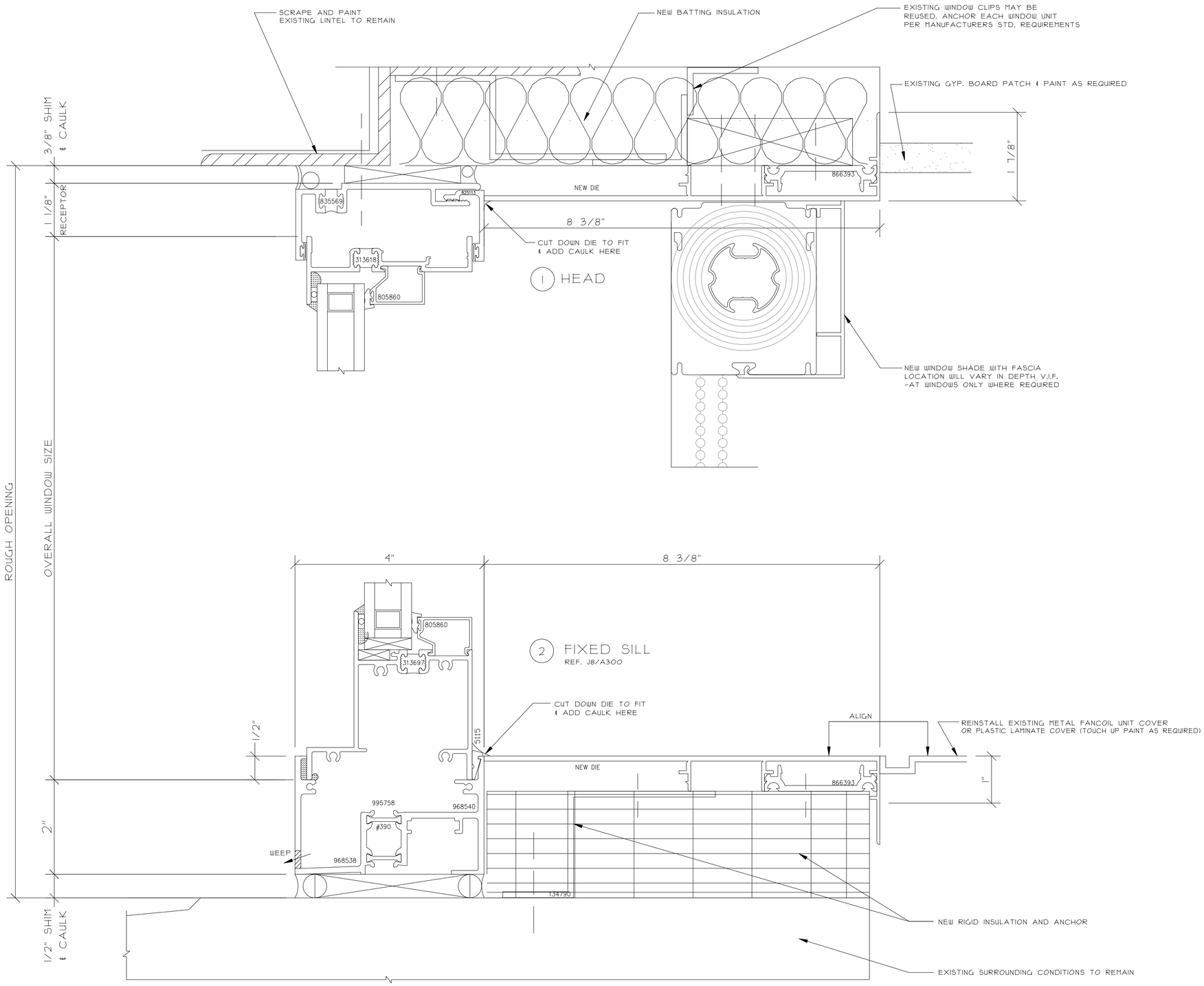

NO.	REVISION DESCRIPTION / ACTION TAKEN	BY	DATE

CONSTRUCTION MANAGER:

ARCHITECT INFO:

PROJECT INFO:

THIS DRAWING INCLUDING THE INFORMATION, DATA AND DESIGN IS CONFIDENTIAL AND THE PROPERTY OF AJAY GLASS CO. IT IS NOT TO BE COPIED, REPRODUCED OR ITS CONTENTS DIVULGED WITHOUT THE WRITTEN PERMISSION OF AJAY GLASS CO.

TITLE
WINDOW WALL DETAILS

DRAWN BY / DATE
SAMPLE

CHECKED BY / DATE

AJAY PROJECT MANAGER:

SCALE:
12" = 1'-0"

AJAY PROJECT NO.:

DWG NO.:
442

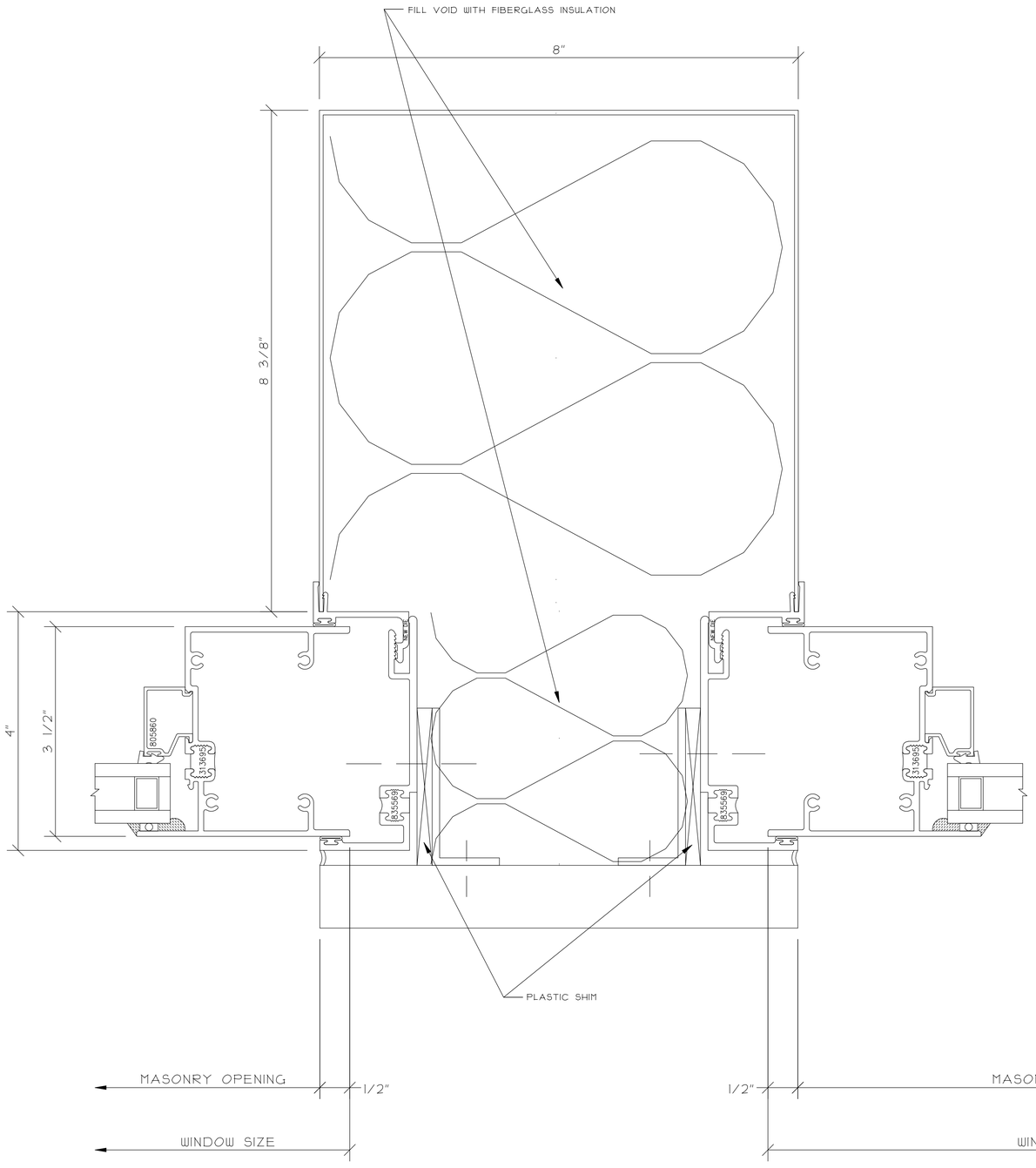

1 FIXED UPPER COLUMN JAMB

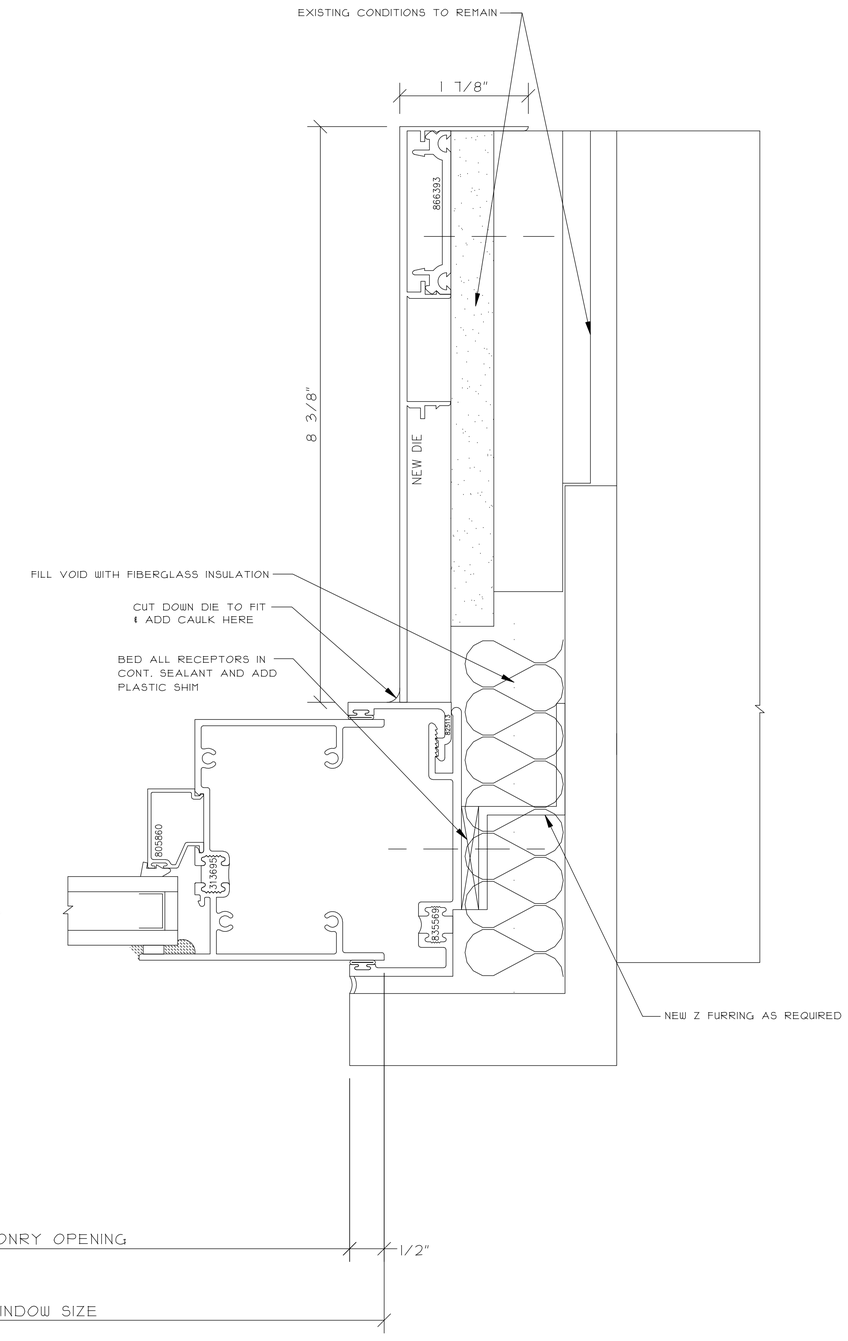

2 FIXED UPPER JAMB
REF. C8/A300

NO.	REVISION DESCRIPTION / ACTION TAKEN	BY	DATE

CONSTRUCTION MANAGER:

ARCHITECT INFO:

PROJECT INFO:

THIS DRAWING, INCLUDING THE INFORMATION, DATA, AND DESIGN IS CONFIDENTIAL AND THE PROPERTY OF AJAY GLASS CO. IT MAY NOT BE COPIED, REPRODUCED OR ITS CONTENTS DIVULGED WITHOUT THE WRITTEN PERMISSION OF AJAY GLASS CO.

TITLE
WINDOW WALL DETAILS

DRAWN BY / DATE
SAMPLE

CHECKED BY / DATE

AJAY PROJECT MANAGER:

SCALE:
12" = 1'-0"

AJAY PROJECT NO.:

DWG NO.:
443

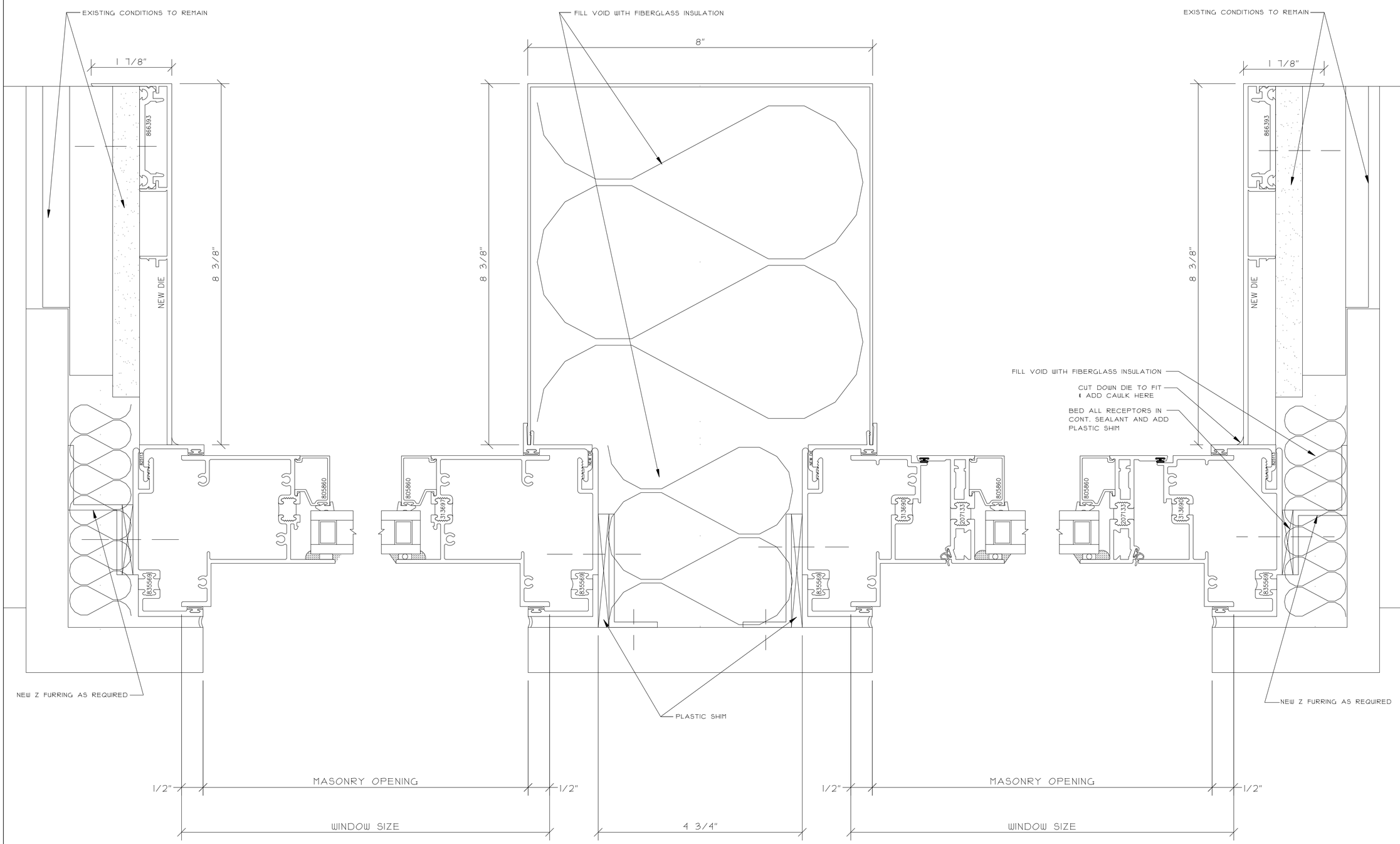

1 FIXED LOWER JAMB

2 FIXED/OPERABLE LOWER COLUMN JAMB
REF. C10/A300

3 OPERABLE JAMB
REF. C12/A300

NO.	REVISION DESCRIPTION / ACTION TAKEN	BY	DATE

CONSTRUCTION MANAGER:

ARCHITECT INFO:

PROJECT INFO:

THIS DRAWING INCLUDING THE INFORMATION, DATA AND DESIGN IS CONFIDENTIAL AND THE PROPERTY OF AJAX GLASS CO. IT MAY NOT BE COPIED, REPRODUCED OR ITS CONTENTS DIVULGED WITHOUT THE WRITTEN PERMISSION OF AJAX GLASS CO.

TITLE
WINDOW WALL DETAILS

DRAWN BY / DATE
SAMPLE

CHECKED BY / DATE

AJAX PROJECT MANAGER:

SCALE:
12" = 1'-0"

AJAX PROJECT NO.:

DWG NO.:
444

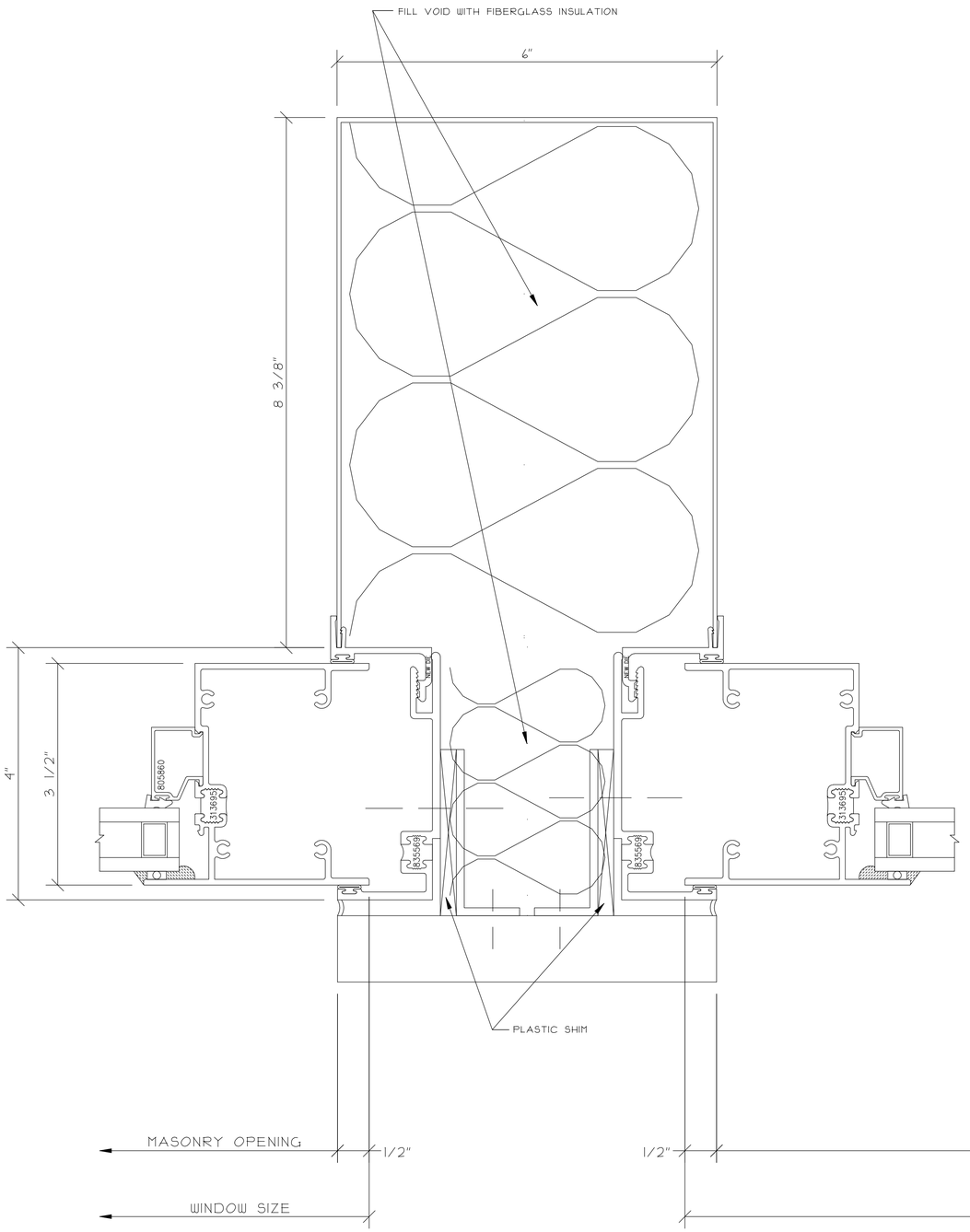

1 FIXED UPPER COLUMN JAMB

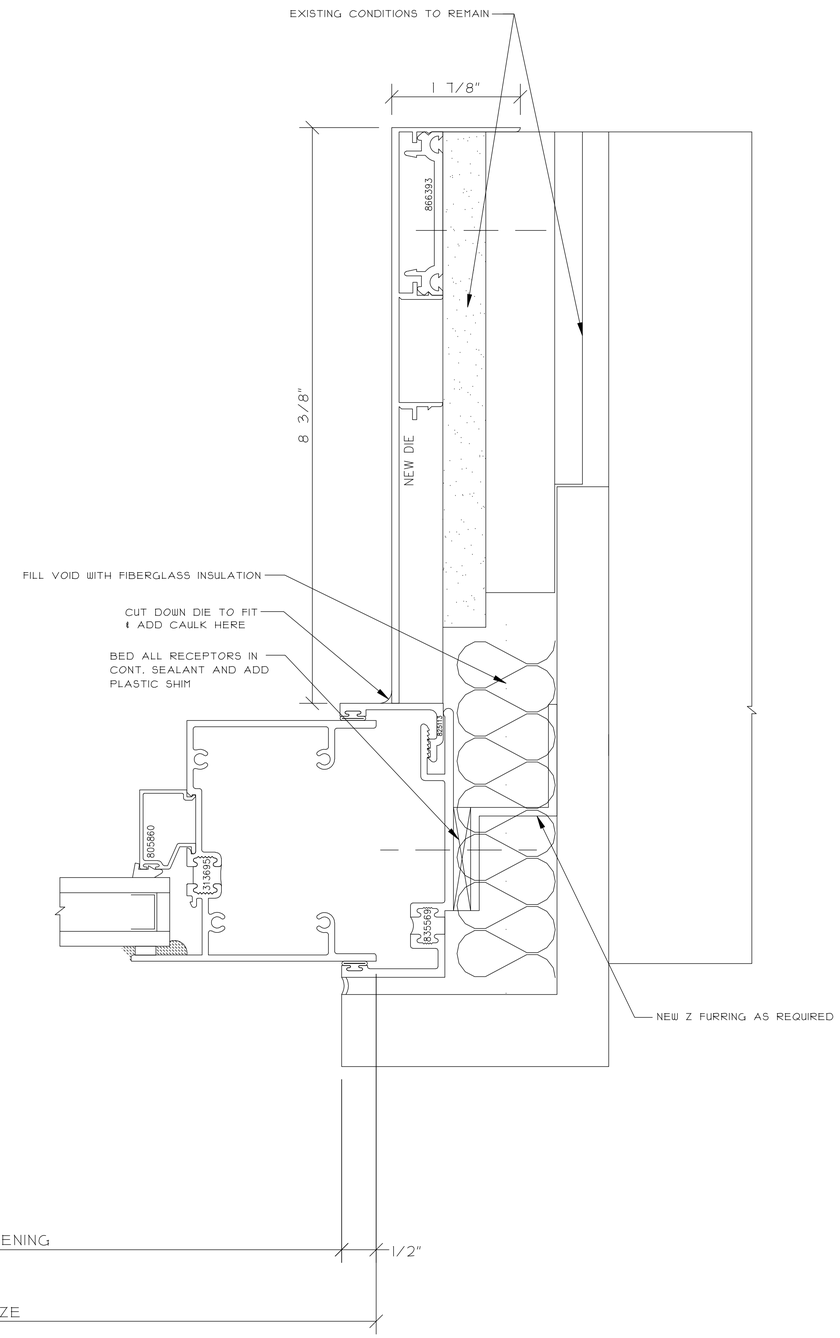

2 FIXED UPPER JAMB
REF. C8/A300

NO.	REVISION DESCRIPTION / ACTION TAKEN	BY	DATE

CONSTRUCTION MANAGER:

ARCHITECT INFO:

PROJECT INFO:

THIS DRAWING, INCLUDING THE INFORMATION, DATA, AND DESIGN IS CONFIDENTIAL AND THE PROPERTY OF AJAY GLASS CO. IT SHALL NOT BE COPIED, REPRODUCED OR ITS CONTENTS DIVULGED WITHOUT THE WRITTEN PERMISSION OF AJAY GLASS CO.

TITLE
WINDOW WALL DETAILS

DRAWN BY / DATE
SAMPLE

CHECKED BY / DATE

AJAY PROJECT MANAGER:

SCALE:
12" = 1'-0"

AJAY PROJECT NO.:

DWG NO.:
445

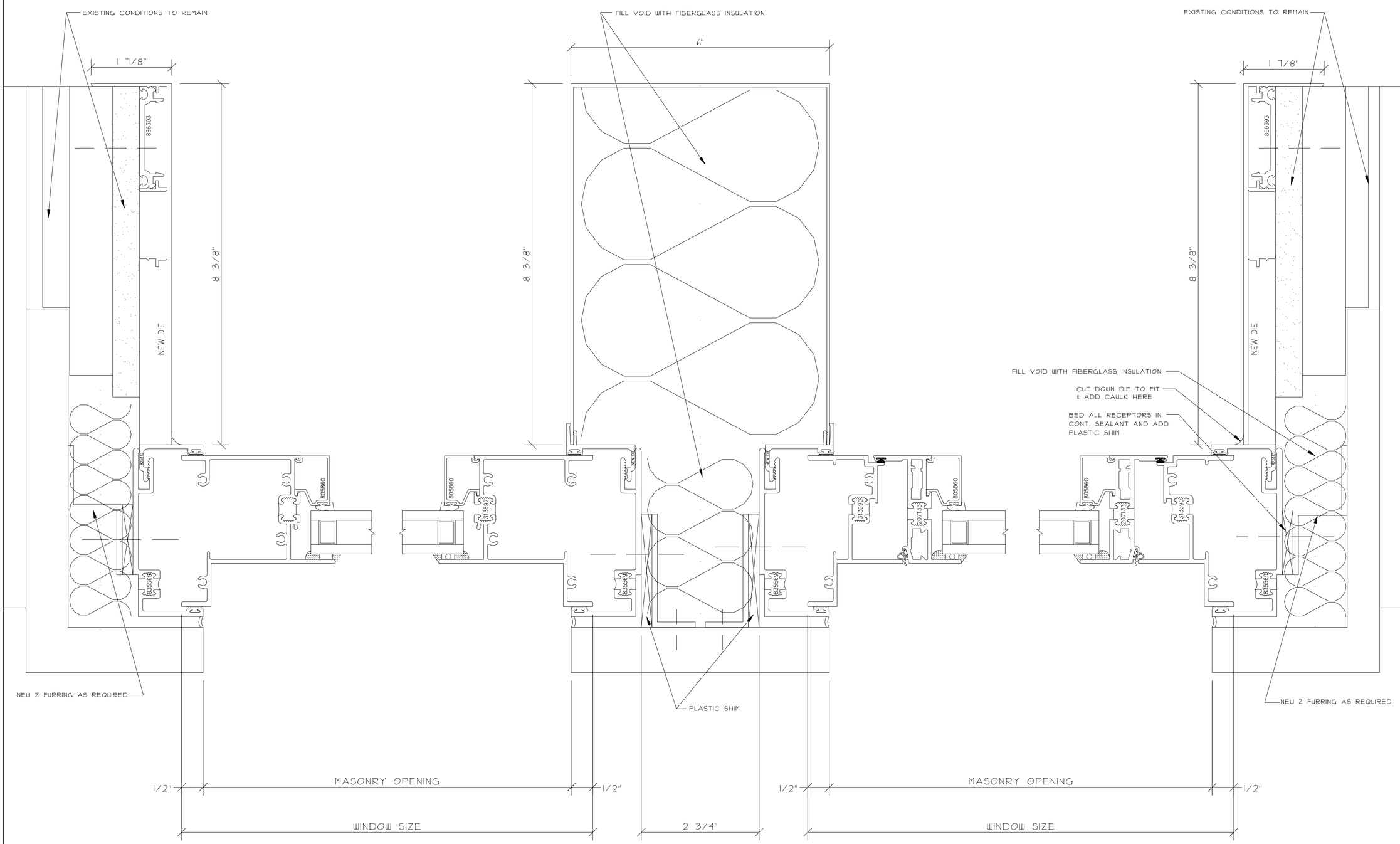

1 FIXED LOWER JAMB

2 FIXED/OPERABLE LOWER COLUMN JAMB
REF. C10/A300

3 OPERABLE JAMB
REF. C12/A300

NO.	REVISION DESCRIPTION / ACTION TAKEN	BY	DATE

CONSTRUCTION MANAGER:

ARCHITECT INFO:

PROJECT INFO:

THIS DRAWING INCLUDING THE INFORMATION, DATA AND DESIGN IS CONFIDENTIAL AND THE PROPERTY OF AJAY GLASS CO. IT MAY NOT BE COPIED, REPRODUCED OR ITS CONTENTS DIVULGED WITHOUT THE WRITTEN PERMISSION OF AJAY GLASS CO.

TITLE
WINDOW WALL DETAILS

DRAWN BY / DATE
SAMPLE

CHECKED BY / DATE

AJAY PROJECT MANAGER:

SCALE:
12" = 1'-0"

AJAY PROJECT NO.:

DWG NO.:
446

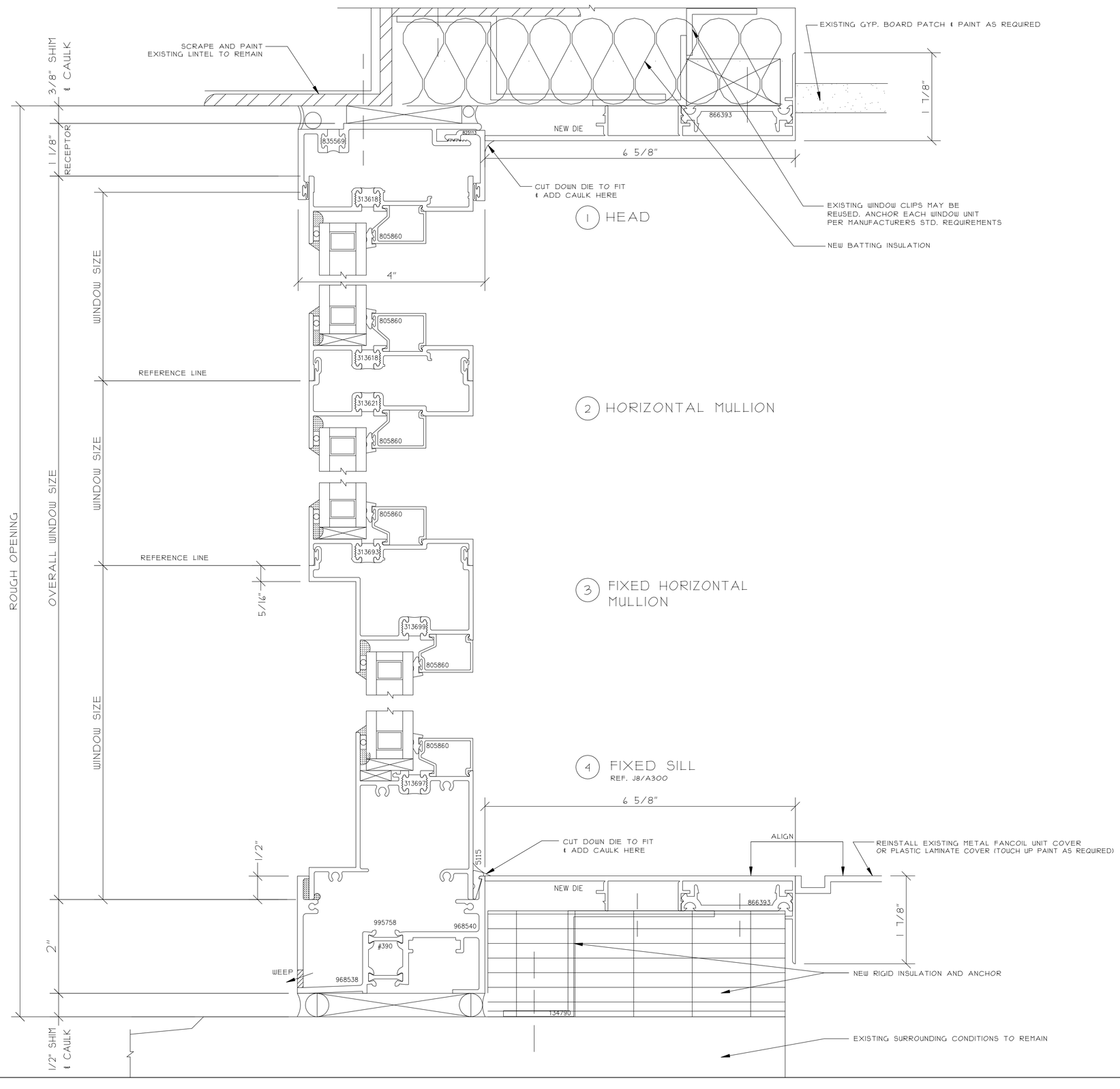

NO.	REVISION DESCRIPTION / ACTION TAKEN	BY	DATE

CONSTRUCTION MANAGER:

ARCHITECT INFO:

PROJECT INFO:

THIS DRAWING INCLUDING THE INFORMATION, DATA AND DESIGN IS CONFIDENTIAL AND THE PROPERTY OF AJAY GLASS. ITS NOT TO BE COPIED, REPRODUCED OR ITS CONTENTS DIVULGED WITHOUT THE WRITTEN PERMISSION OF AJAY GLASS CO.

TITLE: WINDOW WALL DETAILS

DRAWN BY / DATE: SAMPLE

CHECKED BY / DATE:

AJAY PROJECT MANAGER:

SCALE: 12" = 1'-0"

AJAY PROJECT NO.:

DWG NO.: 447

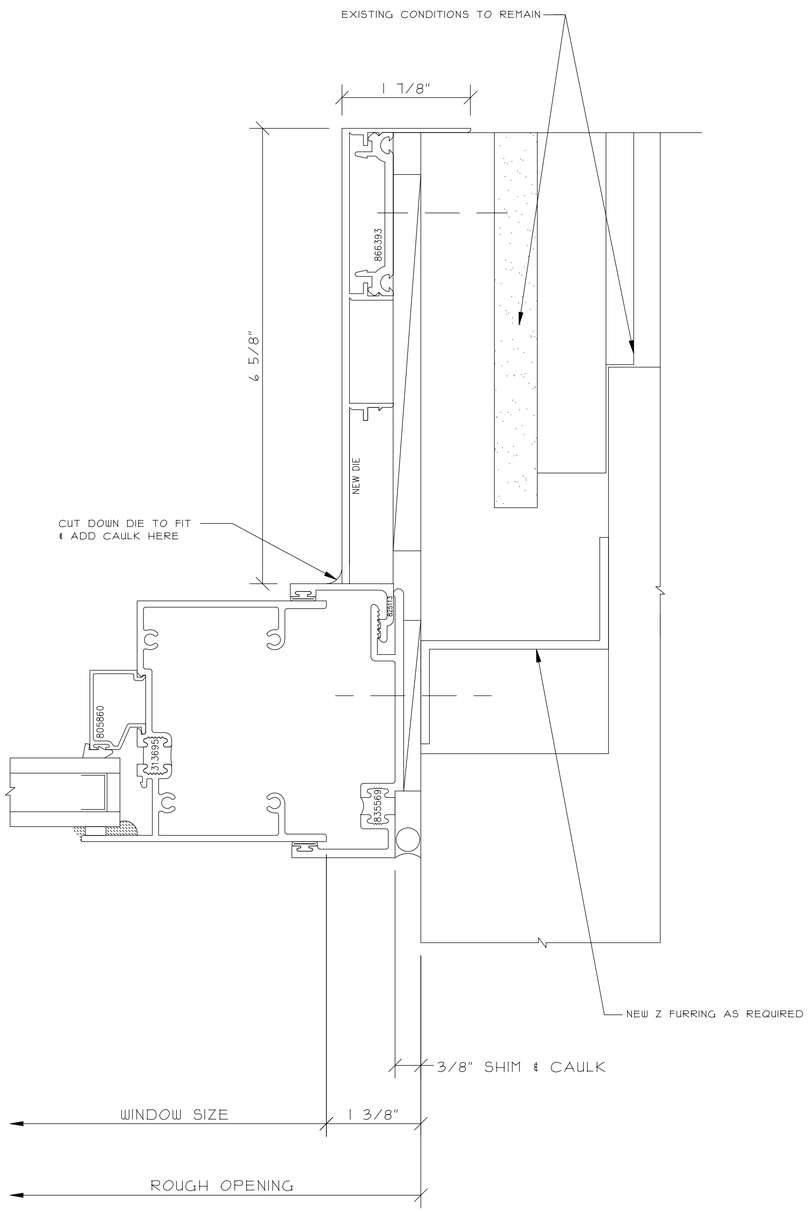

1 FIXED UPPER JAMB

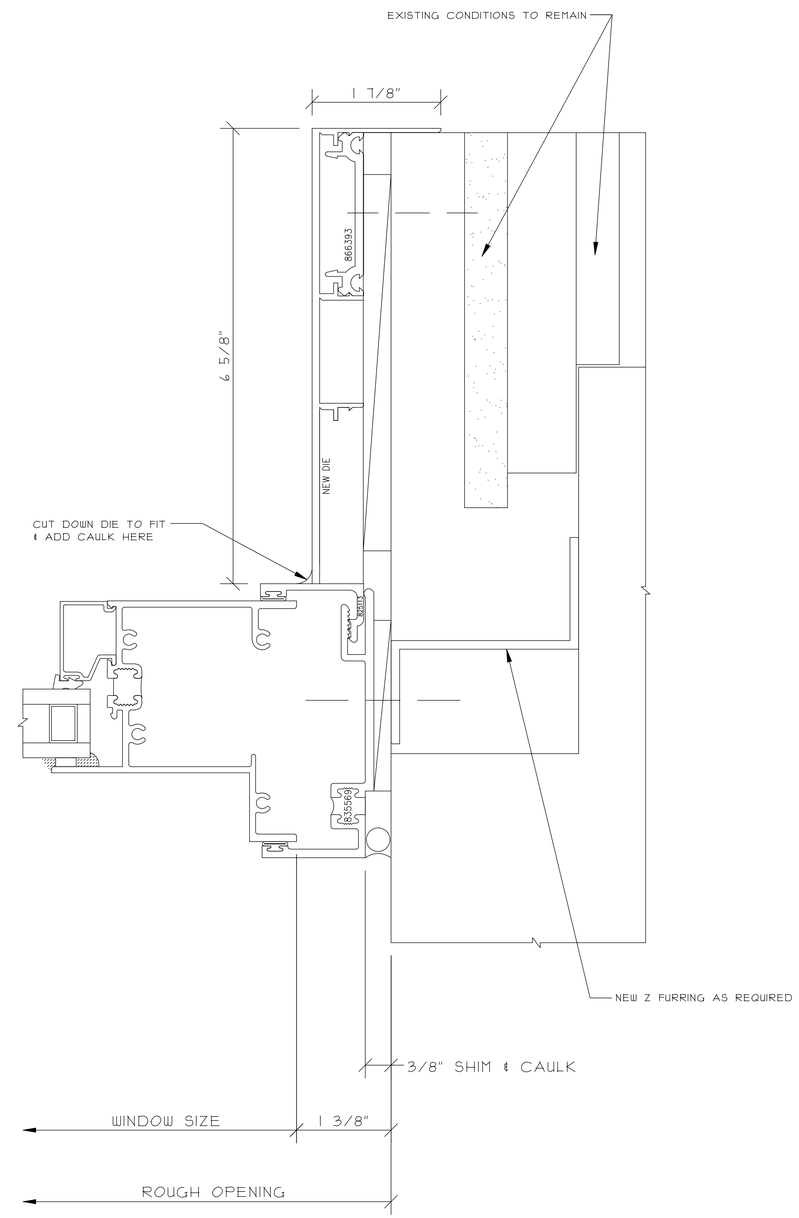

2 FIXED LOWER JAMB

NO.	REVISION DESCRIPTION / ACTION TAKEN	BY	DATE

CONSTRUCTION MANAGER:

ARCHITECT INFO:

PROJECT INFO:

THIS DRAWING INCLUDING THE INFORMATION, DATA AND DESIGN IS CONFIDENTIAL AND THE PROPERTY OF AJAY GLASS CO. IT IS NOT TO BE COPIED, REPRODUCED OR ITS CONTENTS DIVULGED WITHOUT THE WRITTEN PERMISSION OF AJAY GLASS CO.

TITLE: WINDOW WALL DETAILS

DRAWN BY / DATE: SAMPLE

CHECKED BY / DATE:

AJAY PROJECT MANAGER:

SCALE: 12" = 1'-0"

AJAY PROJECT NO.:

DWG NO.: 448

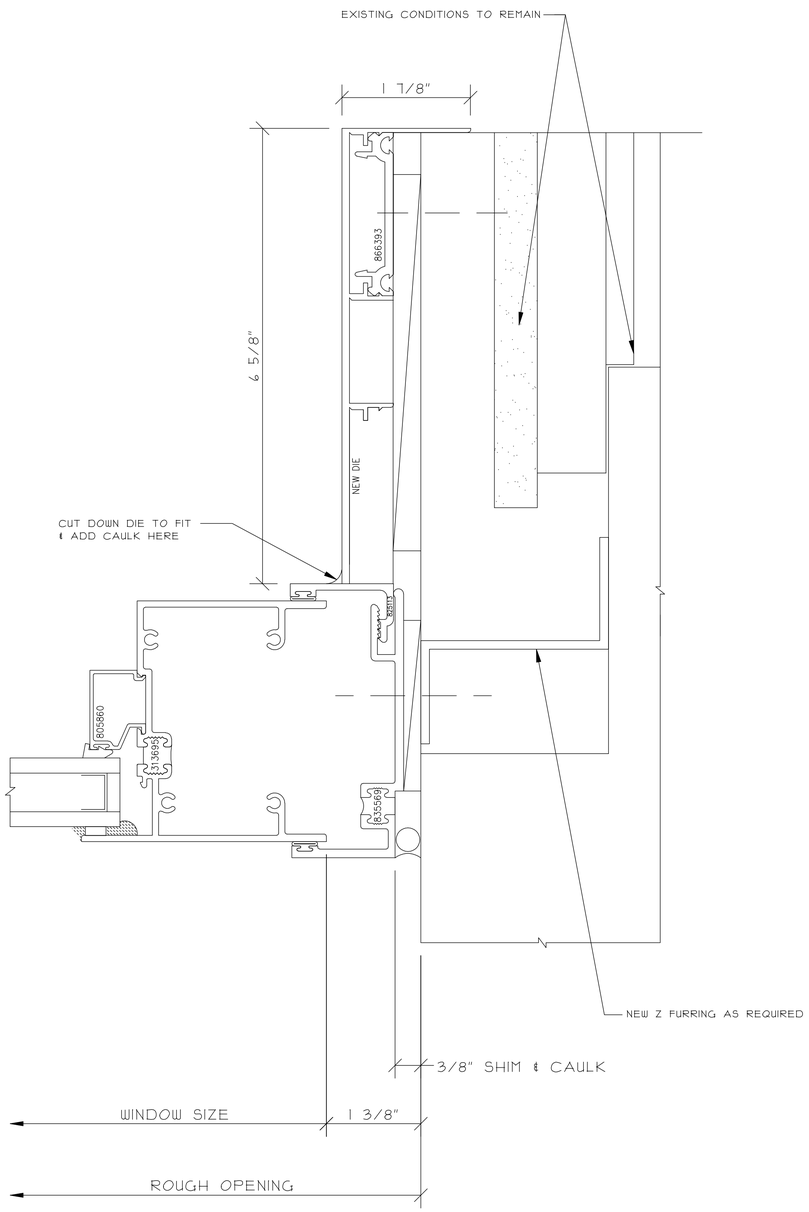

1 FIXED UPPER JAMB

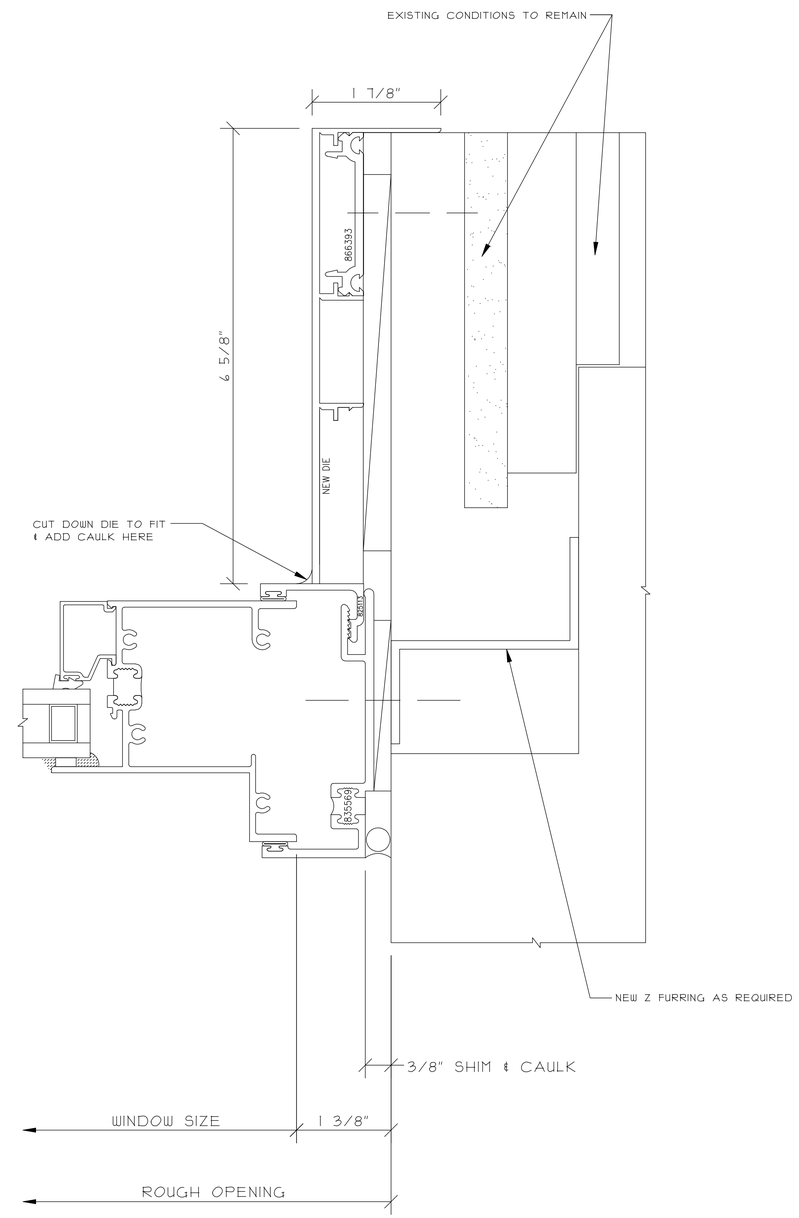

2 FIXED LOWER JAMB

NO.	REVISION DESCRIPTION / ACTION TAKEN	BY	DATE

CONSTRUCTION MANAGER:

ARCHITECT INFO:

PROJECT INFO:

THIS DRAWING INCLUDING THE INFORMATION, DATA AND DESIGN IS CONFIDENTIAL AND THE PROPERTY OF AJAY GLASS CO. IT IS NOT TO BE COPIED, REPRODUCED OR ITS CONTENTS DIVULGED WITHOUT THE WRITTEN PERMISSION OF AJAY GLASS CO.

TITLE: WINDOW WALL DETAILS

DRAWN BY / DATE: SAMPLE

CHECKED BY / DATE:

AJAY PROJECT MANAGER:

SCALE: 12" = 1'-0"

AJAY PROJECT NO.:

DWG NO.: 448

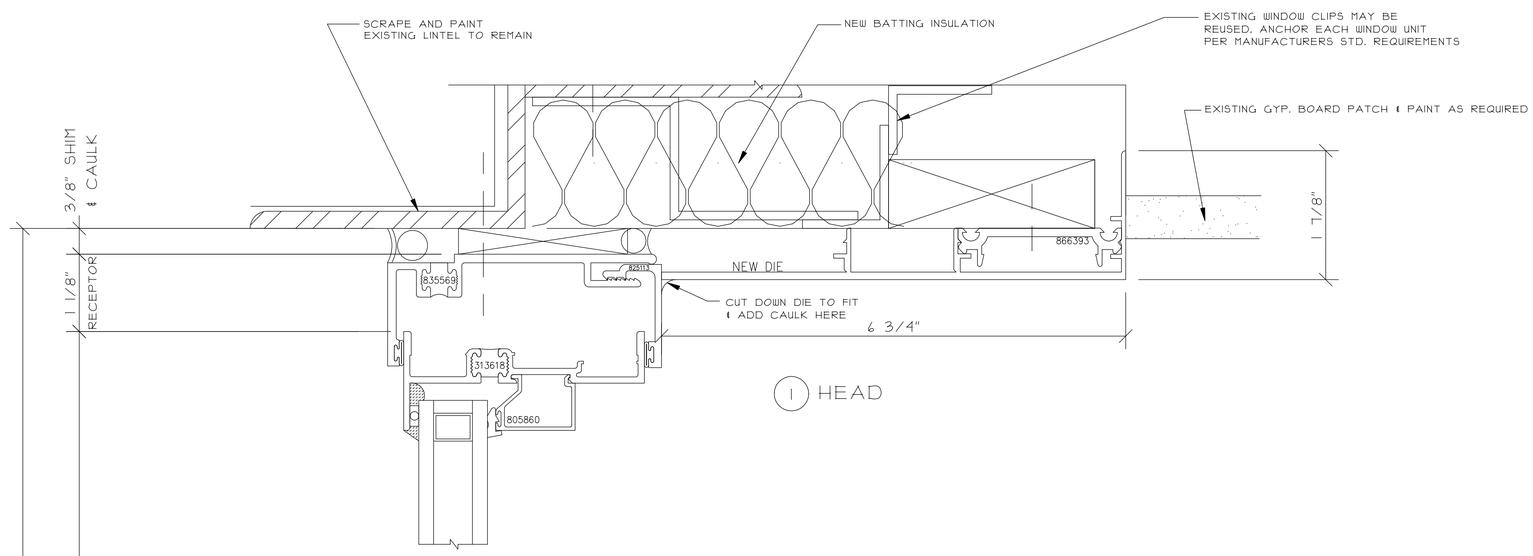

1 HEAD

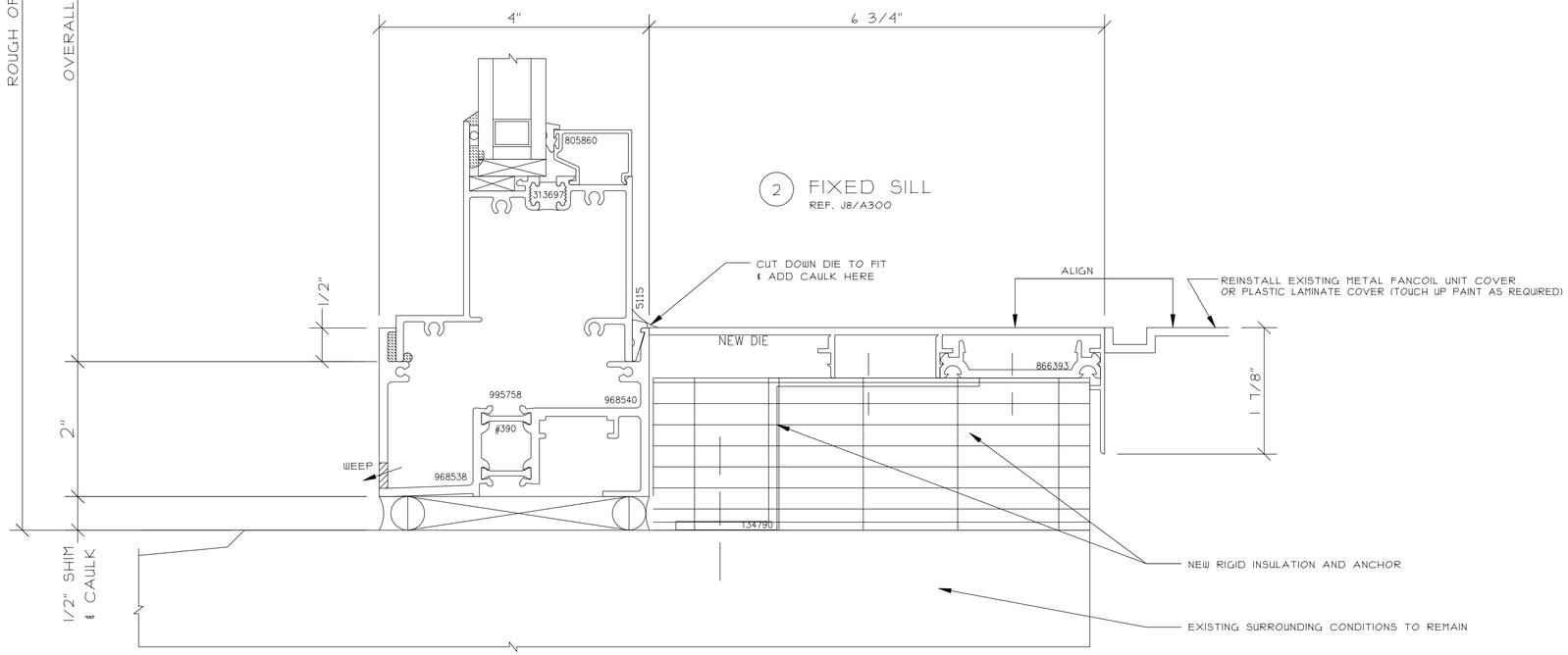

2 FIXED SILL
REF. J8/A300

NO.	REVISION DESCRIPTION / ACTION TAKEN	BY	DATE

CONSTRUCTION MANAGER:

ARCHITECT INFO:

PROJECT INFO:

THIS DRAWING INCLUDING THE INFORMATION, DATA AND DESIGN IS CONFIDENTIAL AND THE PROPERTY OF AJAY GLASS CO. IT IS NOT TO BE COPIED, REPRODUCED OR ITS CONTENTS DIVULGED WITHOUT THE WRITTEN PERMISSION OF AJAY GLASS CO.

TITLE
WINDOW WALL DETAILS

DRAWN BY / DATE
SAMPLE

CHECKED BY / DATE

AJAY PROJECT MANAGER:

SCALE:
12" = 1'-0"

AJAY PROJECT NO.:

DWG NO.:
449

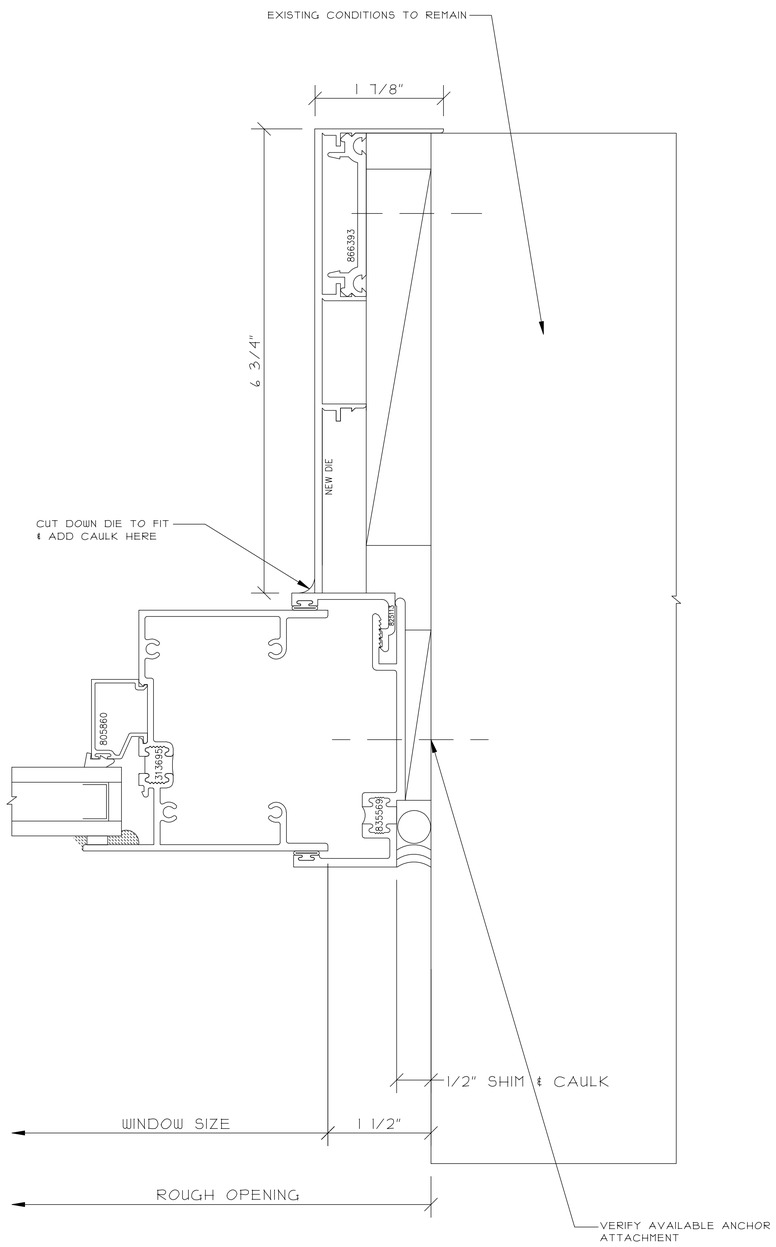

1 FIXED UPPER JAMB

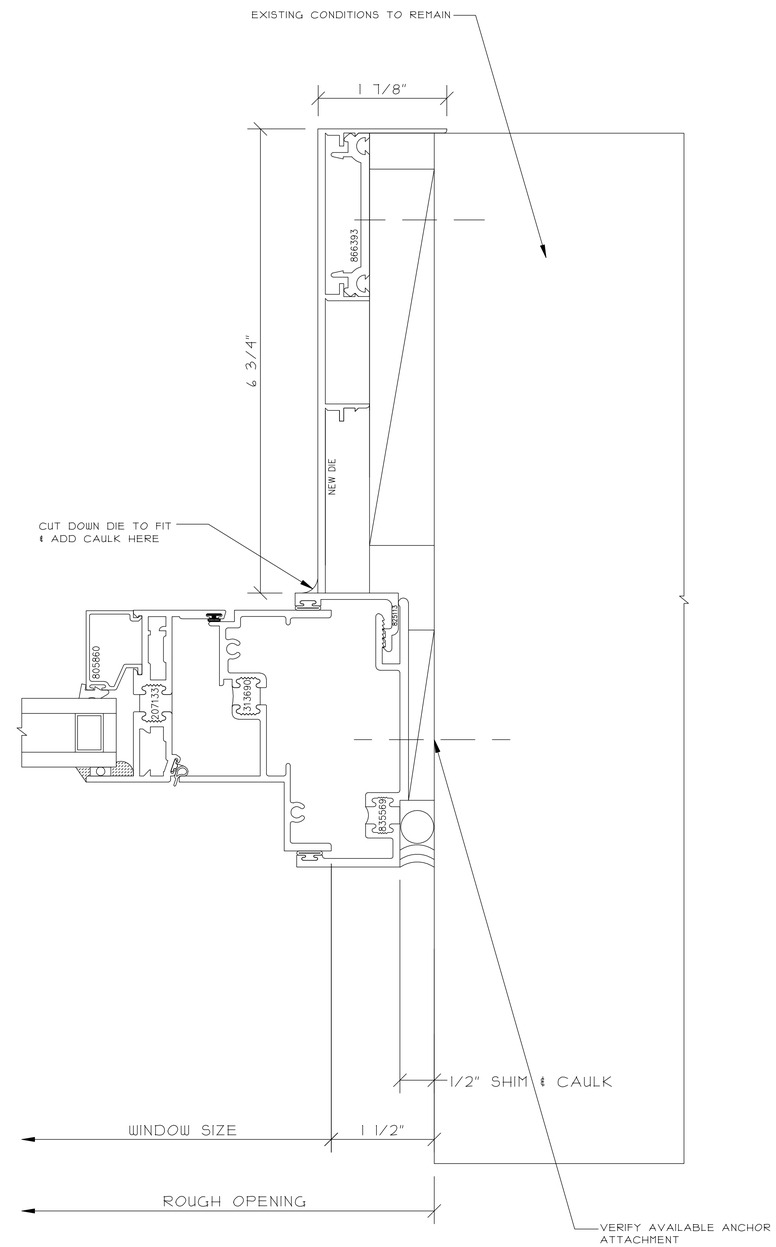

2 OPERABLE JAMB

NO.	REVISION DESCRIPTION / ACTION TAKEN	BY	DATE

CONSTRUCTION MANAGER:

ARCHITECT INFO:

PROJECT INFO:

THIS DRAWING INCLUDING THE INFORMATION, DATA AND DESIGN IS CONFIDENTIAL AND THE PROPERTY OF AJAY GLASS CO. IT IS NOT TO BE COPIED, REPRODUCED OR ITS CONTENTS DIVULGED WITHOUT THE WRITTEN PERMISSION OF AJAY GLASS CO.

TITLE
WINDOW WALL DETAILS

DRAWN BY / DATE
SAMPLE

CHECKED BY / DATE

AJAY PROJECT MANAGER:

SCALE:
12" = 1'-0"

AJAY PROJECT NO.:

DWG NO.:
450

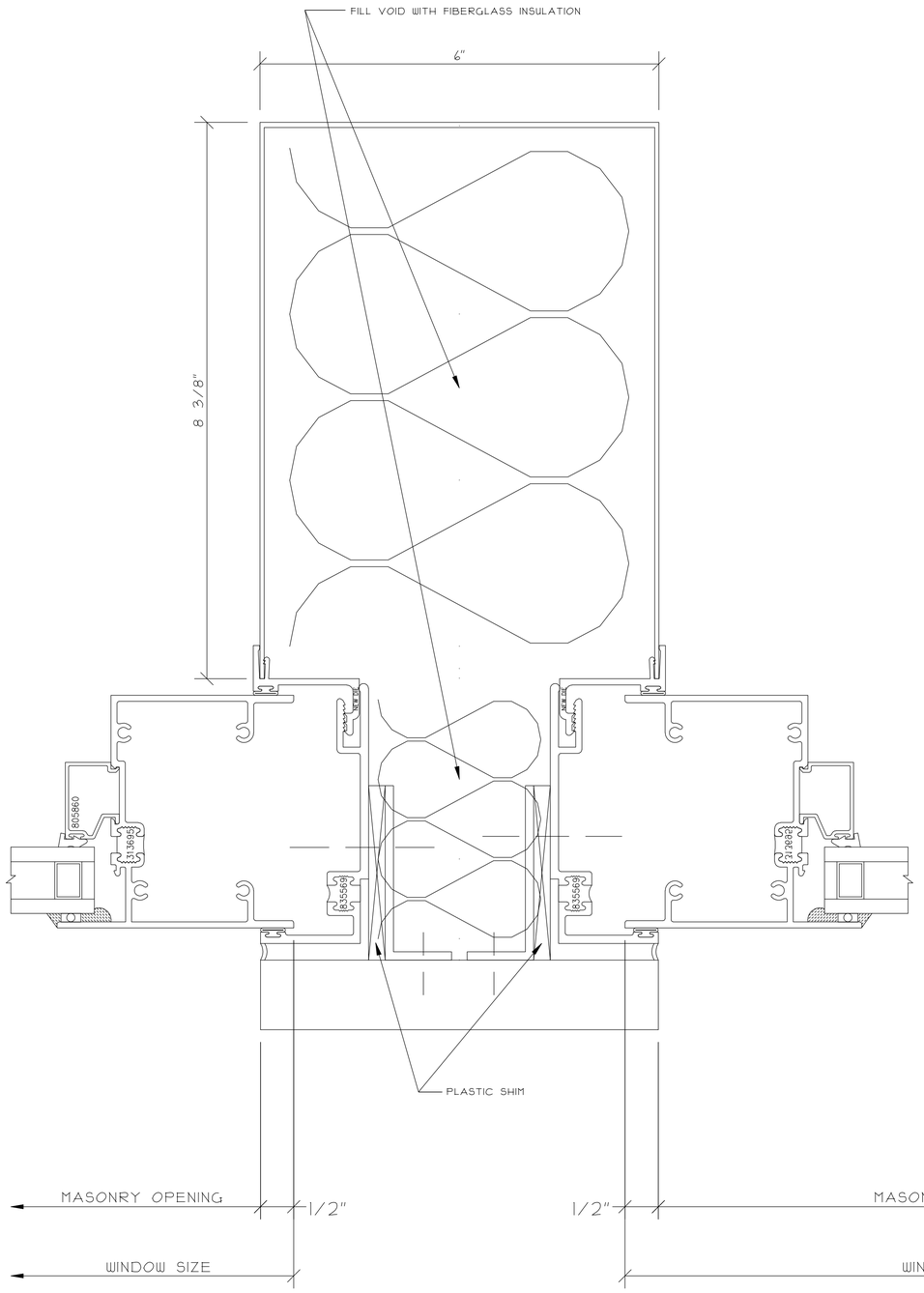

1 FIXED UPPER COLUMN JAMB

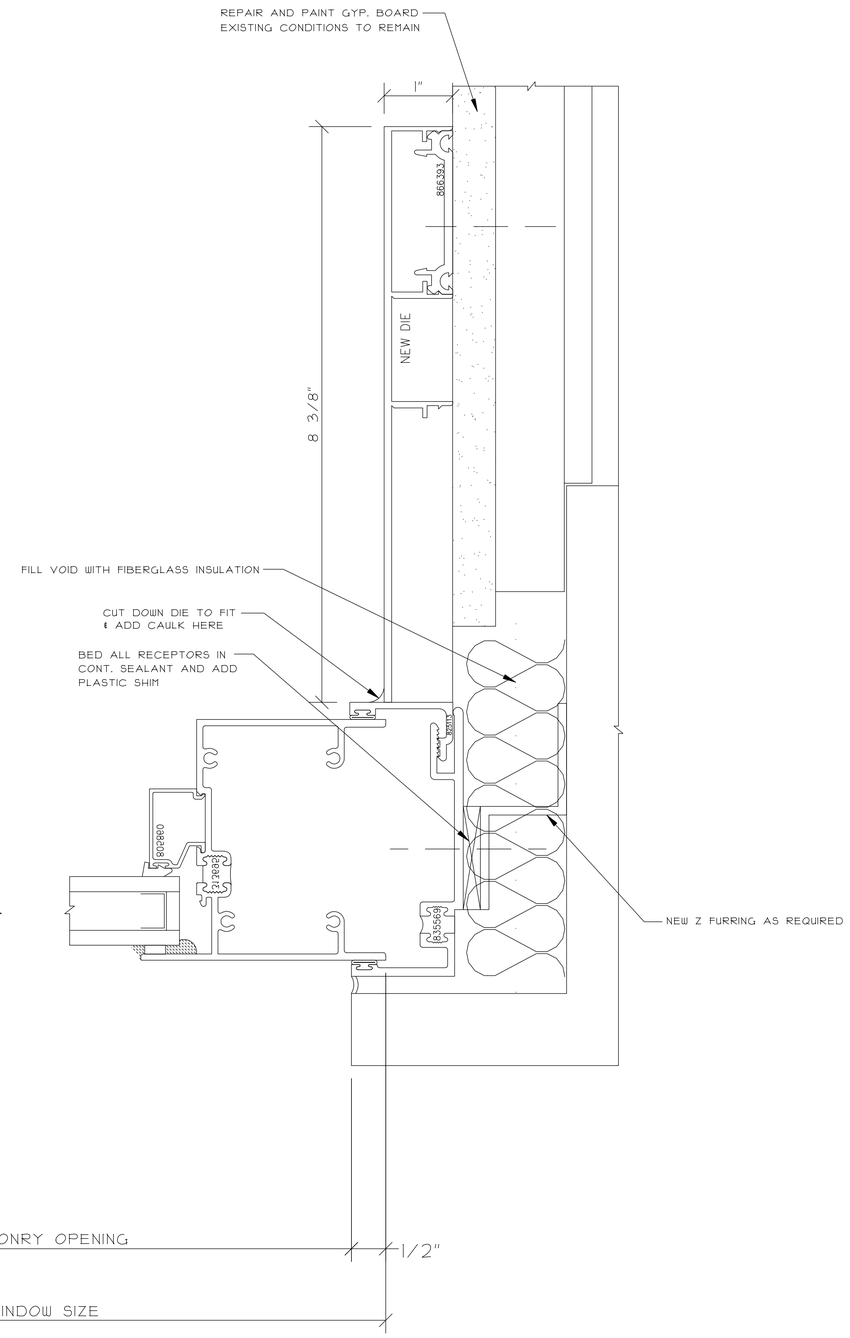

2 FIXED UPPER JAMB
REF. C8/A300

NO.	REVISION DESCRIPTION / ACTION TAKEN	BY	DATE

CONSTRUCTION MANAGER:

ARCHITECT INFO:

PROJECT INFO:

THIS DRAWING INCLUDING THE INFORMATION, DATA AND DESIGN IS CONFIDENTIAL AND THE PROPERTY OF AJAY GLASS CO. IT IS NOT TO BE COPIED, REPRODUCED OR ITS CONTENTS DIVULGED WITHOUT THE WRITTEN PERMISSION OF AJAY GLASS CO.

TITLE
WINDOW WALL DETAILS

DRAWN BY / DATE
SAMPLE

CHECKED BY / DATE

AJAY PROJECT MANAGER:

SCALE:
12" = 1'-0"

AJAY PROJECT NO.:

DWG NO.:
451

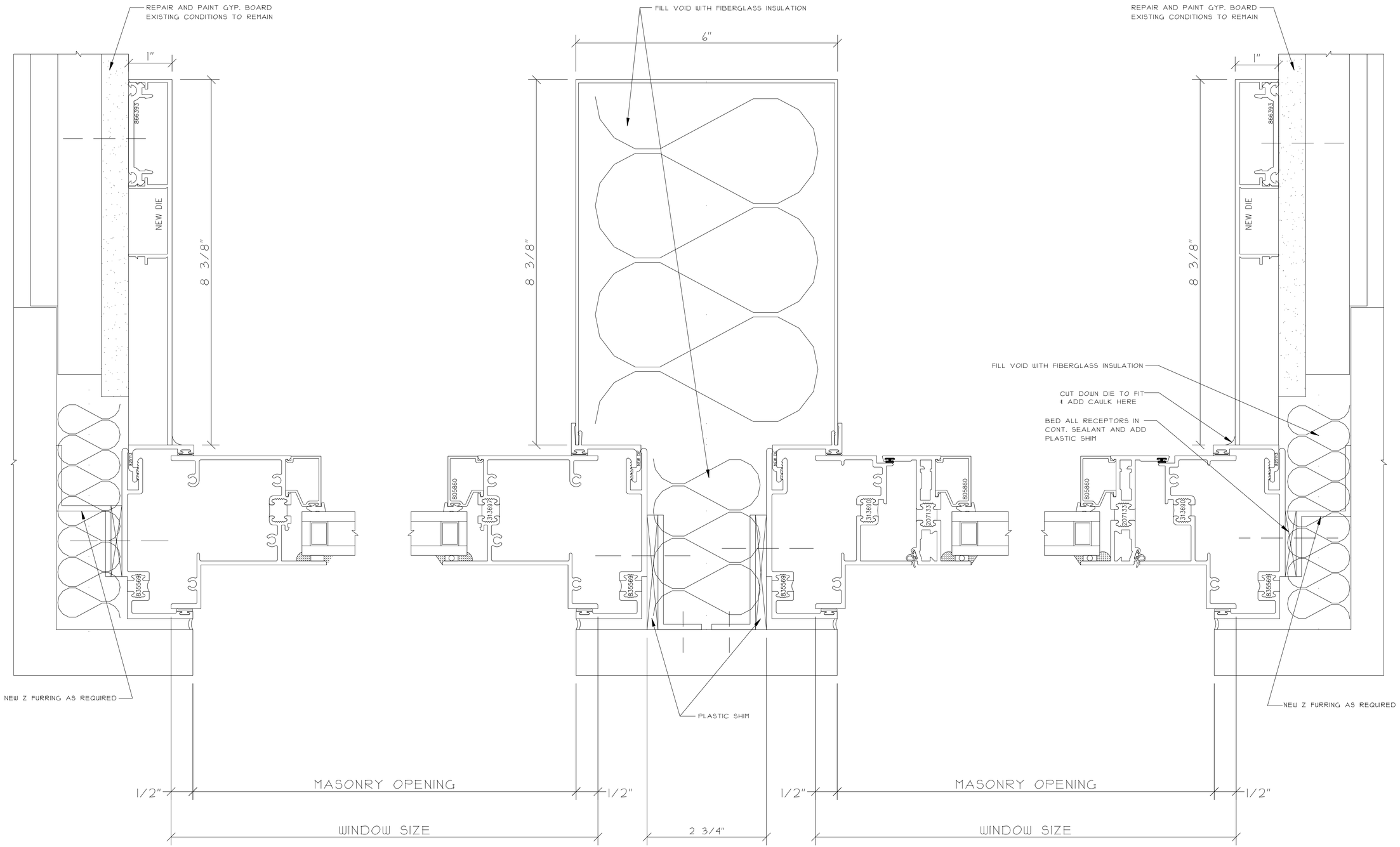

1 FIXED LOWER JAMB

2 FIXED/OPERABLE LOWER COLUMN JAMB
REF. C10/A300

3 OPERABLE JAMB
REF. C12/A300

NO.	REVISION DESCRIPTION / ACTION TAKEN	BY	DATE

CONSTRUCTION MANAGER:

ARCHITECT INFO:

PROJECT INFO:

THIS DRAWING INCLUDING THE INFORMATION, DATA AND DESIGN IS CONFIDENTIAL AND THE PROPERTY OF AAMCO GLASS CO. IT IS NOT TO BE REPRODUCED OR ITS CONTENTS DIVULGED WITHOUT THE WRITTEN PERMISSION OF AJAY GLASS CO.

TITLE
WINDOW WALL DETAILS

DRAWN BY / DATE
SAMPLE

CHECKED BY / DATE

AJAY PROJECT MANAGER:

SCALE:
12" = 1'-0"

AJAY PROJECT NO.:

DWG NO.:
452

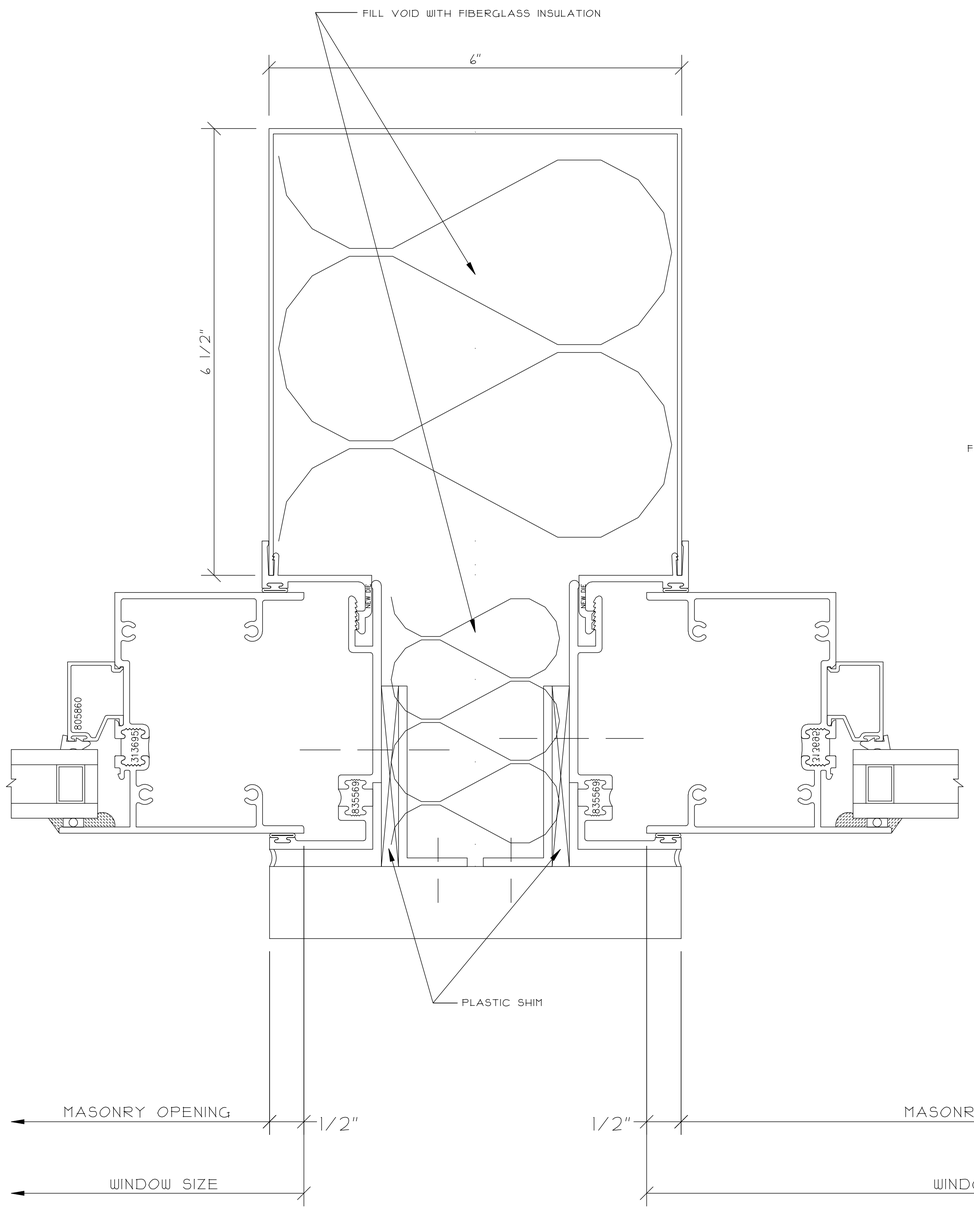

1 FIXED UPPER COLUMN JAMB

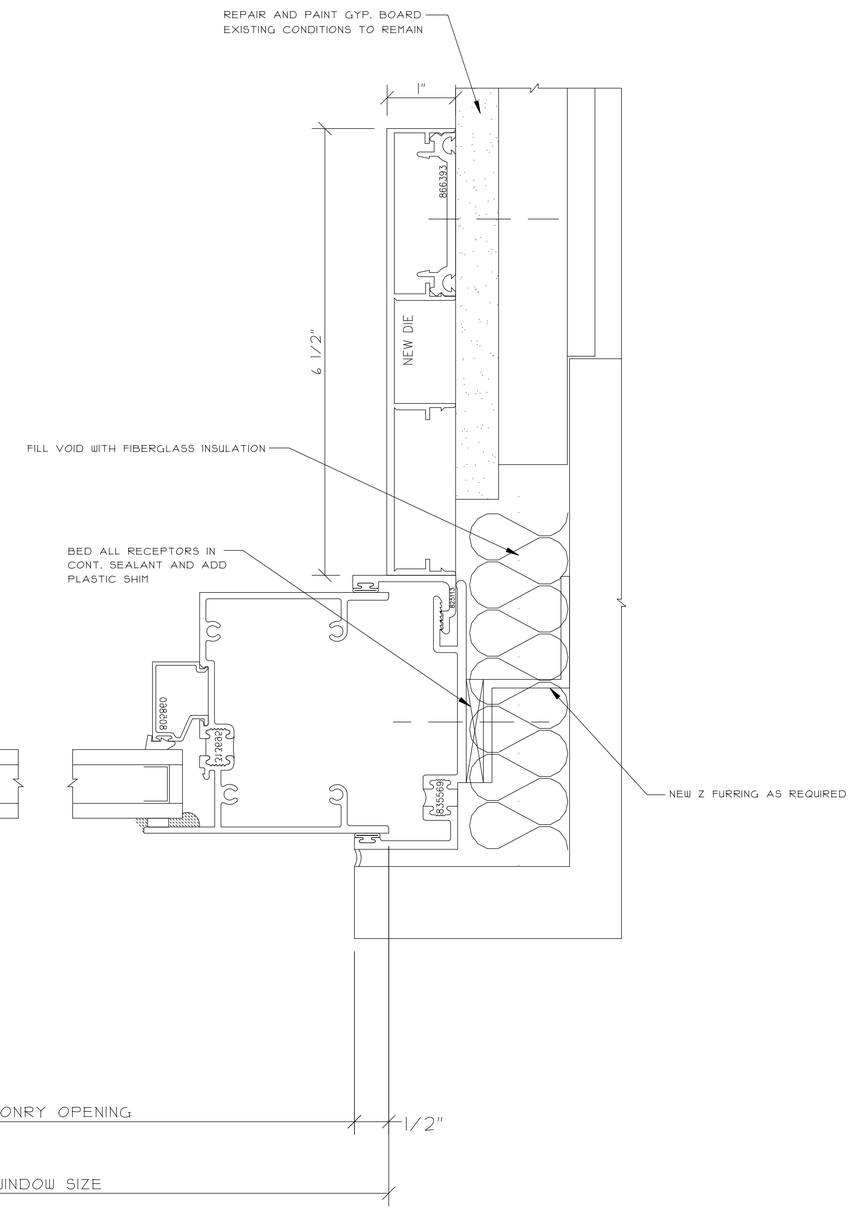

2 FIXED UPPER JAMB
REF. C8/A300

NO.	REVISION DESCRIPTION / ACTION TAKEN	BY	DATE

CONSTRUCTION MANAGER:

ARCHITECT INFO:

PROJECT INFO:

THIS DRAWING, INCLUDING THE INFORMATION, DATA, AND DESIGN IS CONFIDENTIAL AND THE PROPERTY OF AJAY GLASS CO. IT IS NOT TO BE COPIED, REPRODUCED OR ITS CONTENTS DIVULGED WITHOUT THE WRITTEN PERMISSION OF AJAY GLASS CO.

TITLE
WINDOW WALL DETAILS

DRAWN BY / DATE
SAMPLE

CHECKED BY / DATE

AJAY PROJECT MANAGER:

SCALE:
12" = 1'-0"

AJAY PROJECT NO.:

DWG NO.:
453

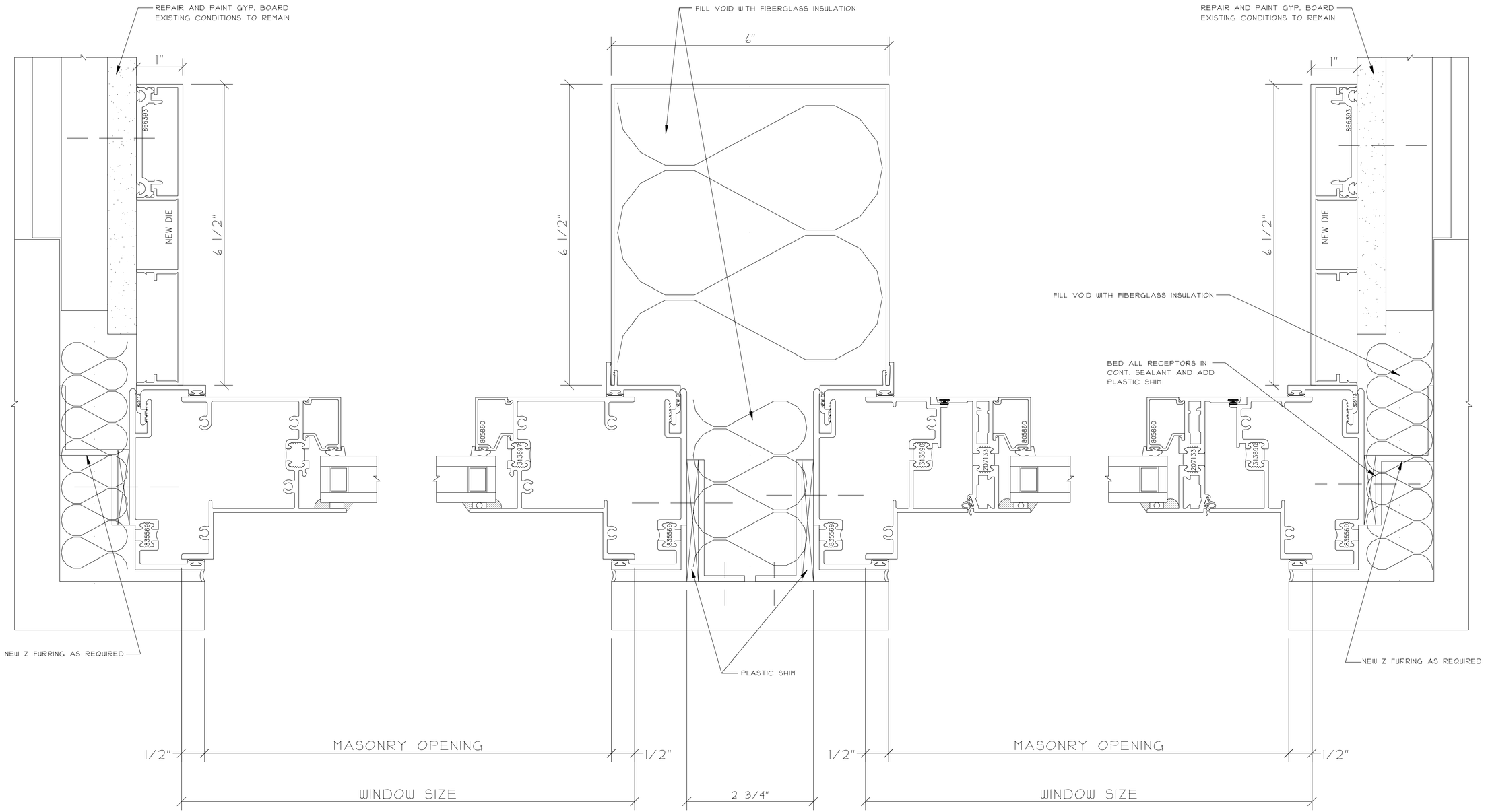

1 FIXED LOWER JAMB

2 FIXED/OPERABLE LOWER COLUMN JAMB
REF. C10/A300

3 OPERABLE JAMB
REF. C12/A300

NO.	REVISION DESCRIPTION / ACTION TAKEN	BY	DATE

CONSTRUCTION MANAGER:

ARCHITECT INFO:

PROJECT INFO:

THIS DRAWING INCLUDING THE INFORMATION, DATA AND DESIGN IS CONFIDENTIAL AND THE PROPERTY OF AAMCO GLASS CO. IT IS NOT TO BE REPRODUCED OR ITS CONTENTS DIVULGED WITHOUT THE WRITTEN PERMISSION OF AJAY GLASS CO.

TITLE
WINDOW WALL DETAILS

DRAWN BY / DATE
SAMPLE

CHECKED BY / DATE

AJAY PROJECT MANAGER:

SCALE:
12" = 1'-0"

AJAY PROJECT NO.:

DWG NO.:
454

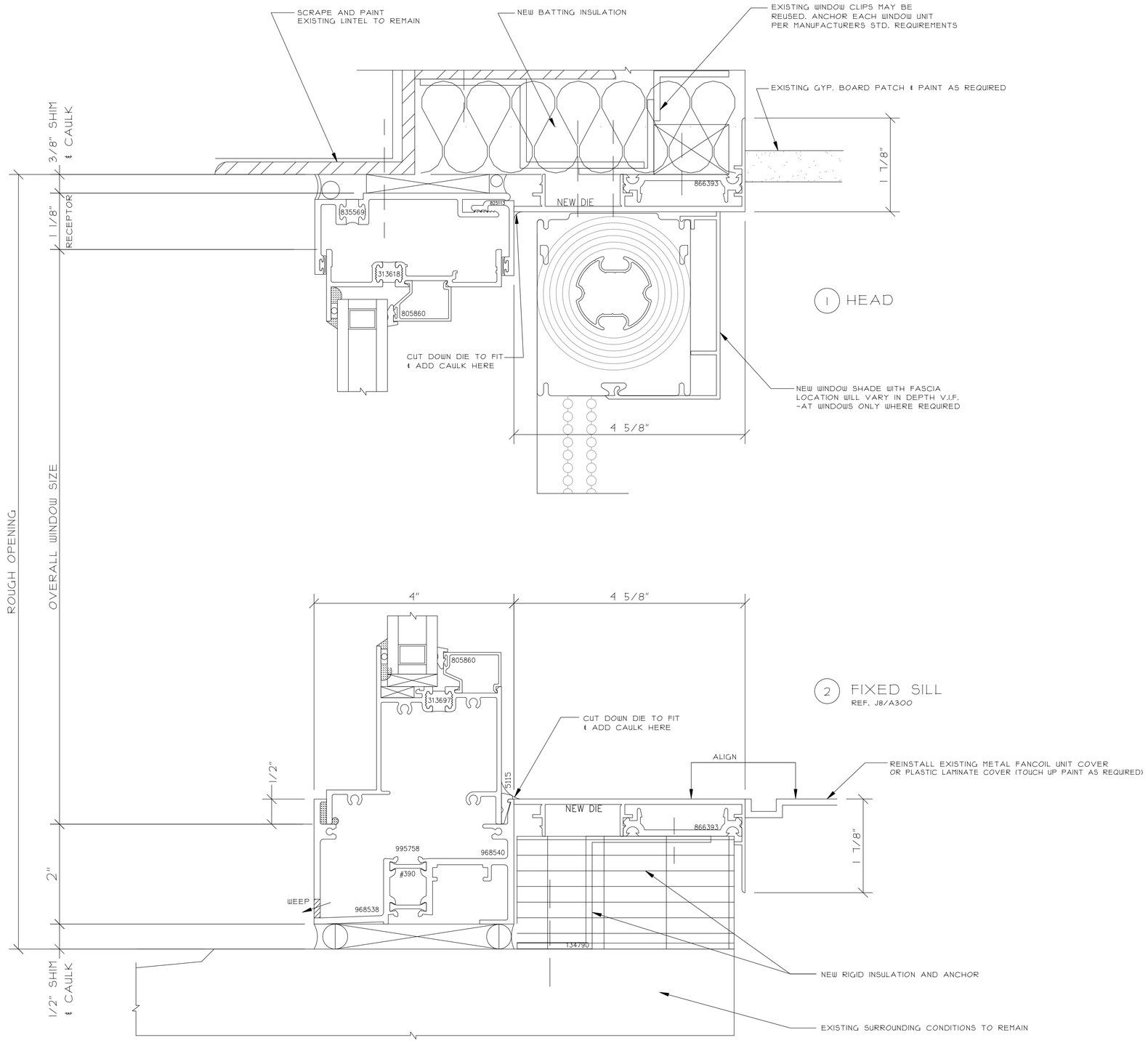

NO.	REVISION DESCRIPTION / ACTION TAKEN	BY	DATE

CONSTRUCTION MANAGER:

ARCHITECT INFO:

PROJECT INFO:

THIS DRAWING INCLUDING THE INFORMATION, DATA AND DESIGN IS CONFIDENTIAL AND THE PROPERTY OF AJAY GLASS CO. IT IS NOT TO BE COPIED, REPRODUCED OR ITS CONTENTS DIVULGED WITHOUT THE WRITTEN PERMISSION OF AJAY GLASS CO.

TITLE
WINDOW WALL DETAILS

DRAWN BY / DATE
SAMPLE

CHECKED BY / DATE

AJAY PROJECT MANAGER:

SCALE:
12" = 1'-0"

AJAY PROJECT NO.:

DWG NO.:
455

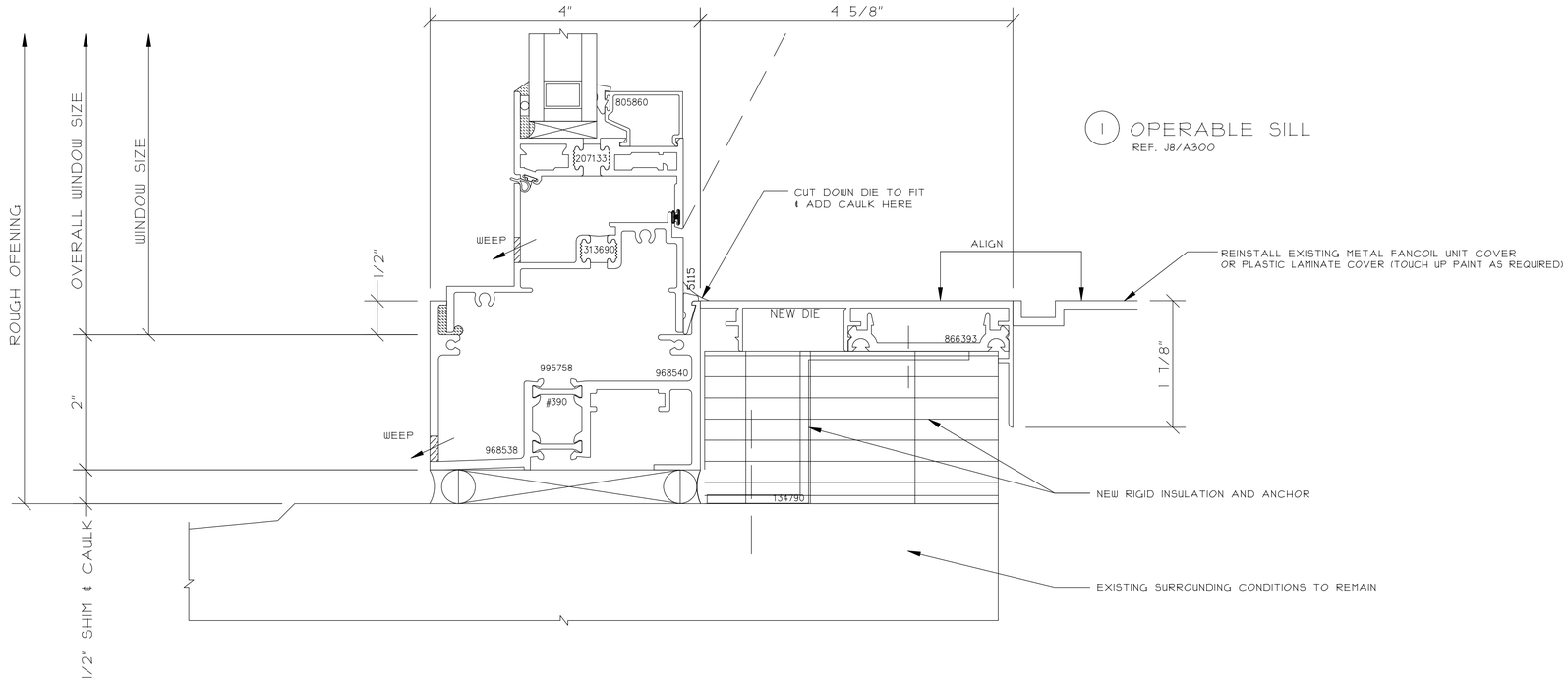

1 OPERABLE SILL
REF. J8/A300

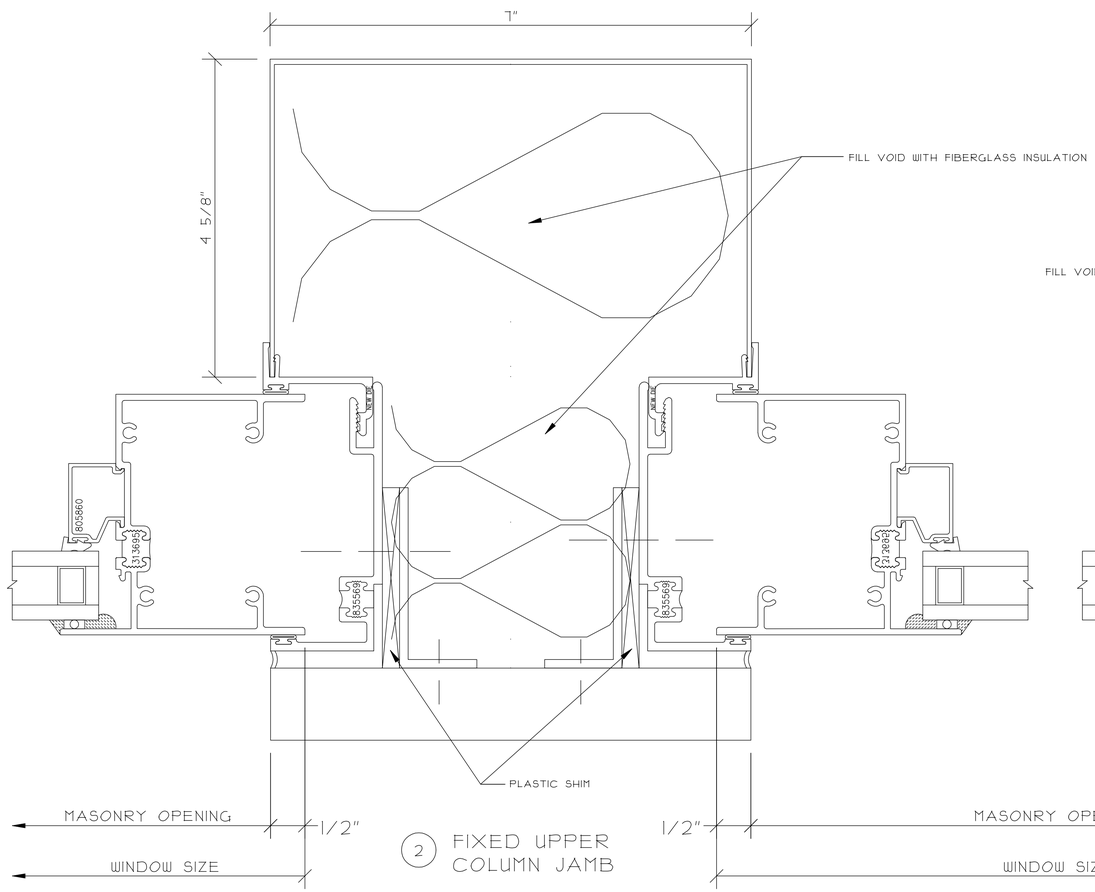

2 FIXED UPPER COLUMN JAMB

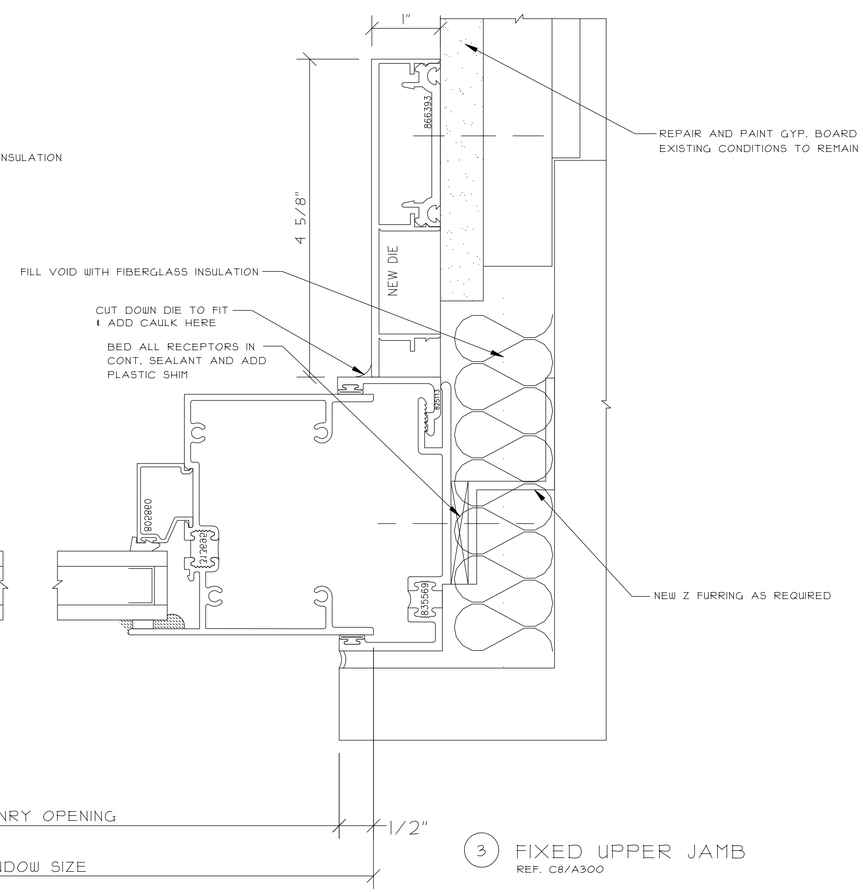

3 FIXED UPPER JAMB
REF. C8/A300

NO.	REVISION DESCRIPTION / ACTION TAKEN	BY	DATE

CONSTRUCTION MANAGER:

ARCHITECT INFO:

PROJECT INFO:

THIS DRAWING INCLUDING THE INFORMATION, DATA, AND DESIGN IS CONFIDENTIAL AND THE PROPERTY OF AJAY GLASS CO. IT SHALL NOT BE COPIED, REPRODUCED OR ITS CONTENTS DIVULGED WITHOUT THE WRITTEN PERMISSION OF AJAY GLASS CO.

TITLE: WINDOW WALL DETAILS

DRAWN BY / DATE: SAMPLE

CHECKED BY / DATE

AJAY PROJECT MANAGER:

SCALE: 12" = 1'-0"

AJAY PROJECT NO.:

DWG NO.: 456

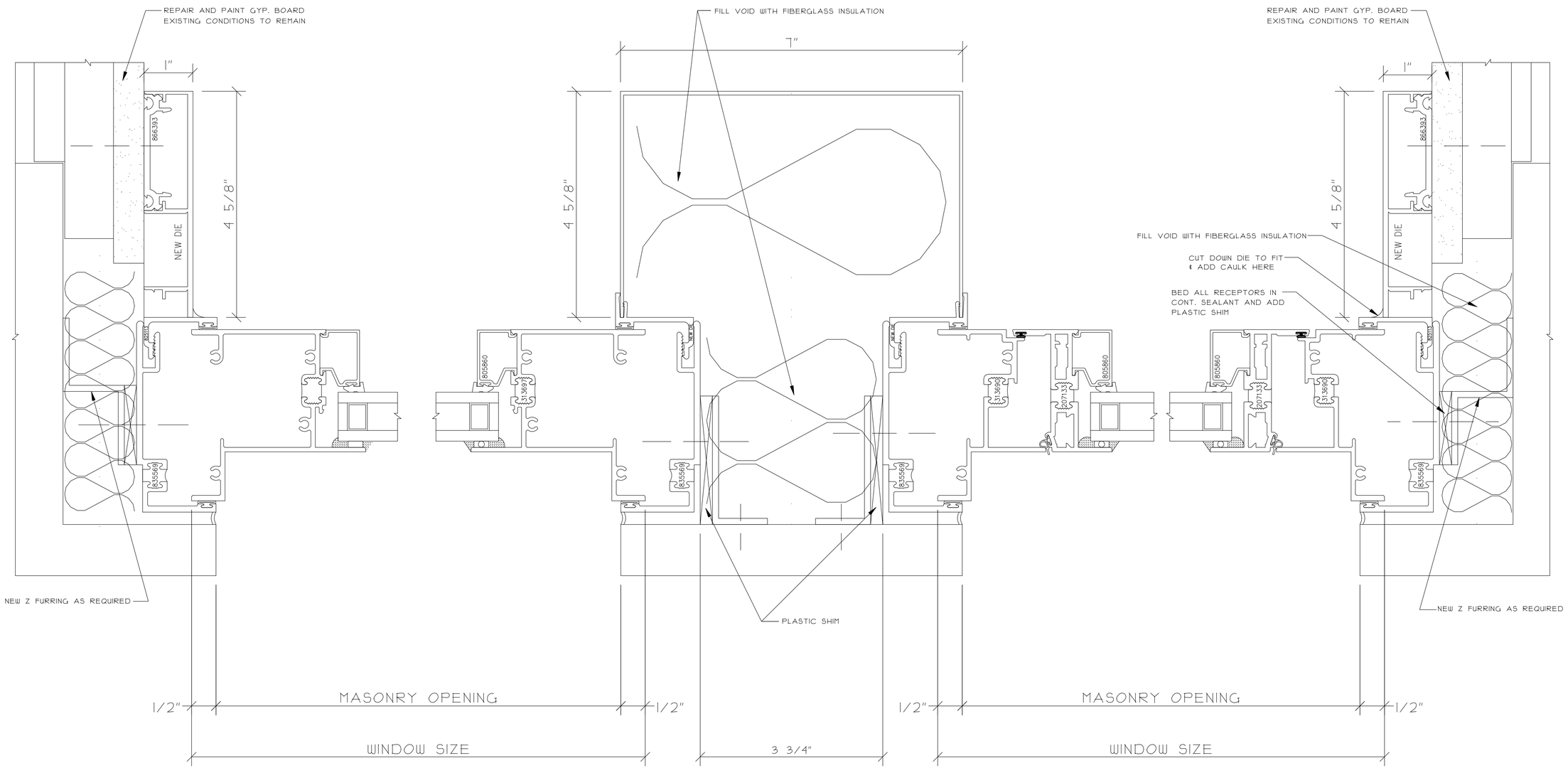

1 FIXED LOWER JAMB

2 FIXED/OPERABLE LOWER COLUMN JAMB
REF. C10/A300

3 OPERABLE JAMB
REF. C12/A300

NO.	REVISION DESCRIPTION / ACTION TAKEN	BY	DATE

CONSTRUCTION MANAGER:

ARCHITECT INFO:

PROJECT INFO:

THIS DRAWING INCLUDING THE INFORMATION, DATA AND DESIGN IS CONFIDENTIAL AND THE PROPERTY OF AJAY GLASS CO. IT IS NOT TO BE REPRODUCED OR USED FOR ITS CONTENTS DIVULGED WITHOUT THE WRITTEN PERMISSION OF AJAY GLASS CO.

TITLE
WINDOW WALL DETAILS

DRAWN BY / DATE
SAMPLE

CHECKED BY / DATE

AJAY PROJECT MANAGER:

SCALE:
12" = 1'-0"

AJAY PROJECT NO.:

DWG NO.:
457

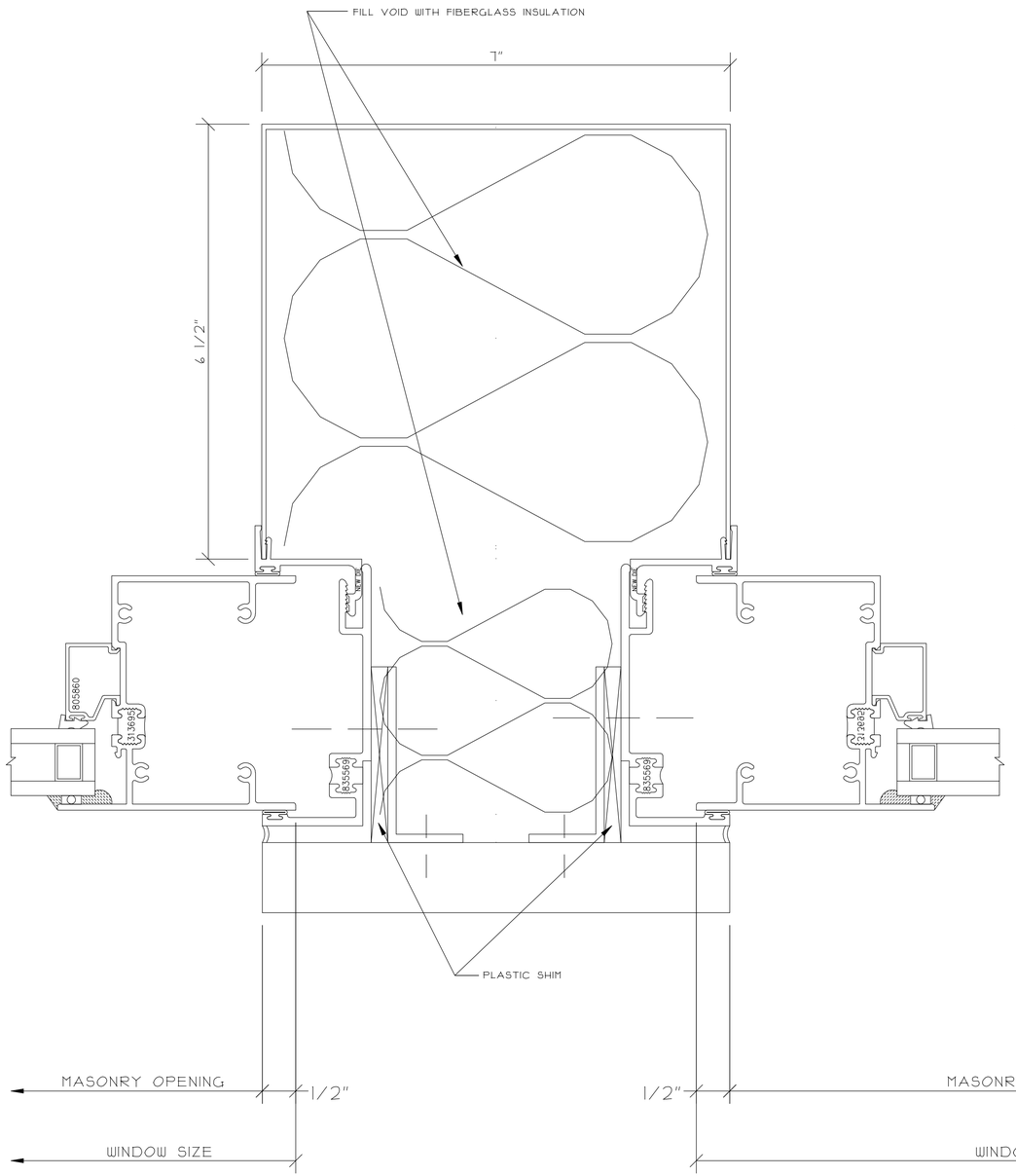

1 FIXED UPPER COLUMN JAMB

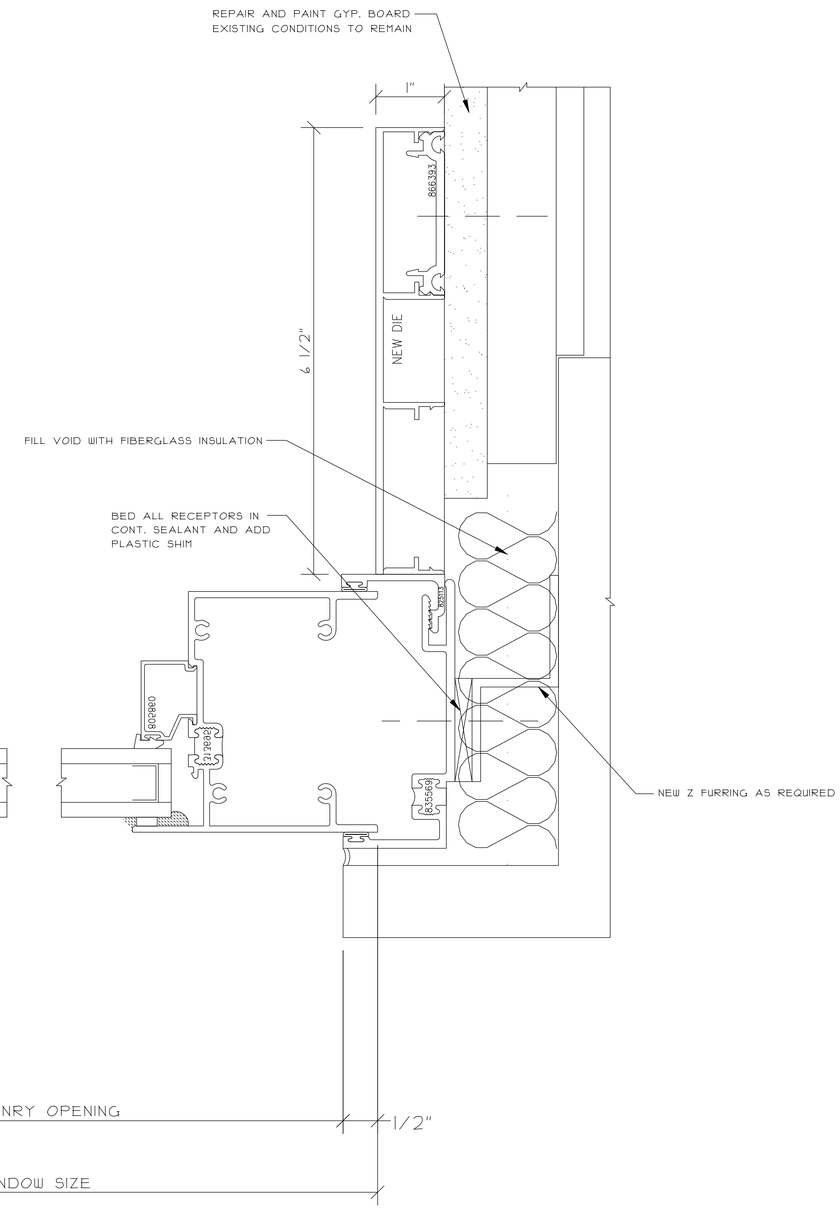

2 FIXED UPPER JAMB
REF. C8/A300

NO.	REVISION DESCRIPTION / ACTION TAKEN	BY	DATE

CONSTRUCTION MANAGER:

ARCHITECT INFO:

PROJECT INFO:

THIS DRAWING, INCLUDING THE INFORMATION, DATA, AND DESIGN IS CONFIDENTIAL AND THE PROPERTY OF AJAY GLASS CO. IT IS NOT TO BE COPIED, REPRODUCED OR ITS CONTENTS DIVULGED WITHOUT THE WRITTEN PERMISSION OF AJAY GLASS CO.

TITLE
WINDOW WALL DETAILS

DRAWN BY / DATE
SAMPLE

CHECKED BY / DATE

AJAY PROJECT MANAGER:

SCALE:
12" = 1'-0"

AJAY PROJECT NO.:

DWG NO.:
458

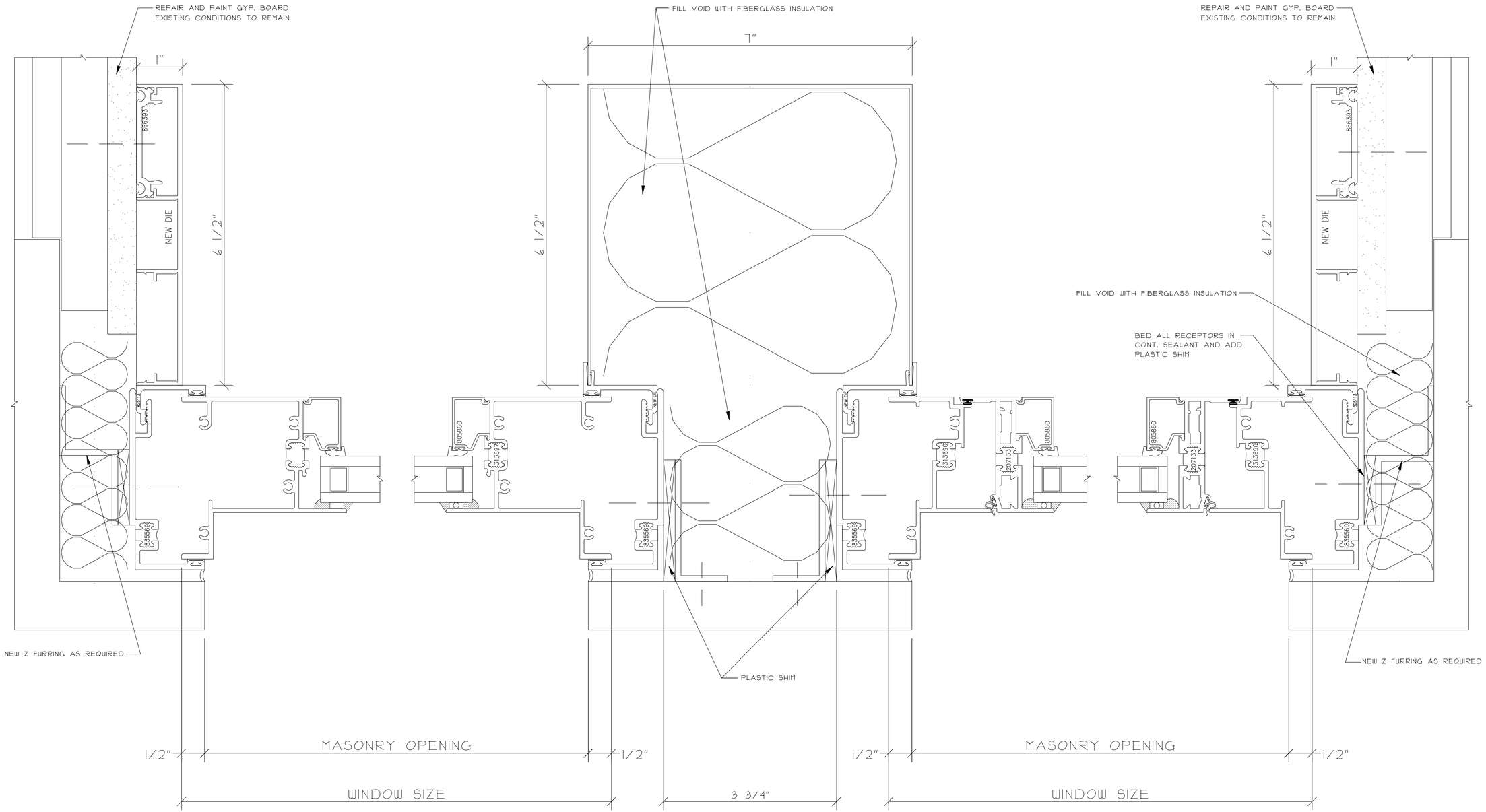

1 FIXED LOWER JAMB

2 FIXED/OPERABLE LOWER COLUMN JAMB
REF. C10/A300

3 OPERABLE JAMB
REF. C12/A300

NO.	REVISION DESCRIPTION / ACTION TAKEN	BY	DATE

CONSTRUCTION MANAGER:

ARCHITECT INFO:

PROJECT INFO:

THIS DRAWING INCLUDING THE INFORMATION, DATA AND DESIGN IS CONFIDENTIAL AND THE PROPERTY OF AJAY GLASS CO. IT IS NOT TO BE COPIED, REPRODUCED OR ITS CONTENTS DIVULGED WITHOUT THE WRITTEN PERMISSION OF AJAY GLASS CO.

TITLE
WINDOW WALL DETAILS

DRAWN BY / DATE
SAMPLE

CHECKED BY / DATE

AJAY PROJECT MANAGER:

SCALE:
12" = 1'-0"

AJAY PROJECT NO.:

DWG NO.:
459

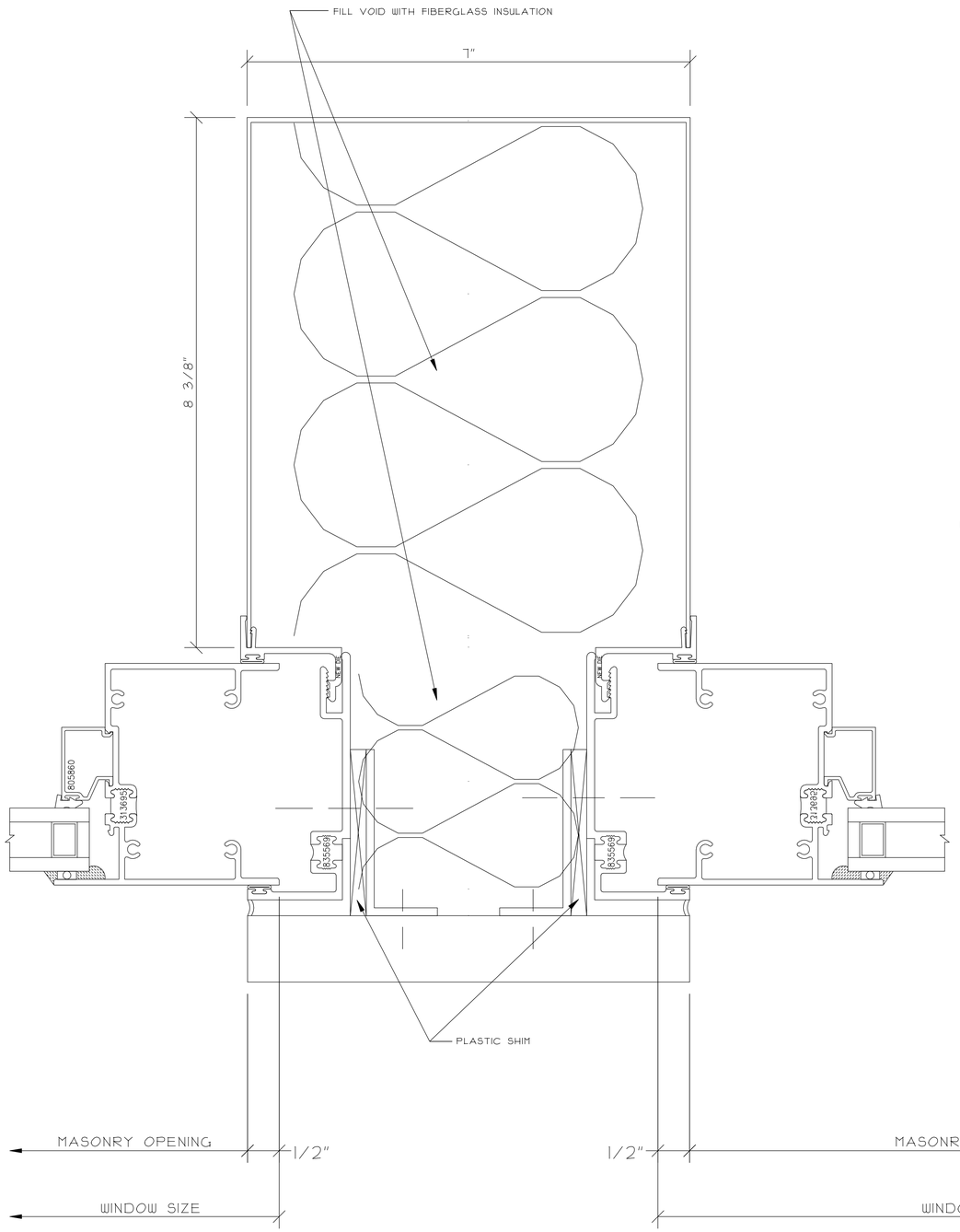

1 FIXED UPPER COLUMN JAMB

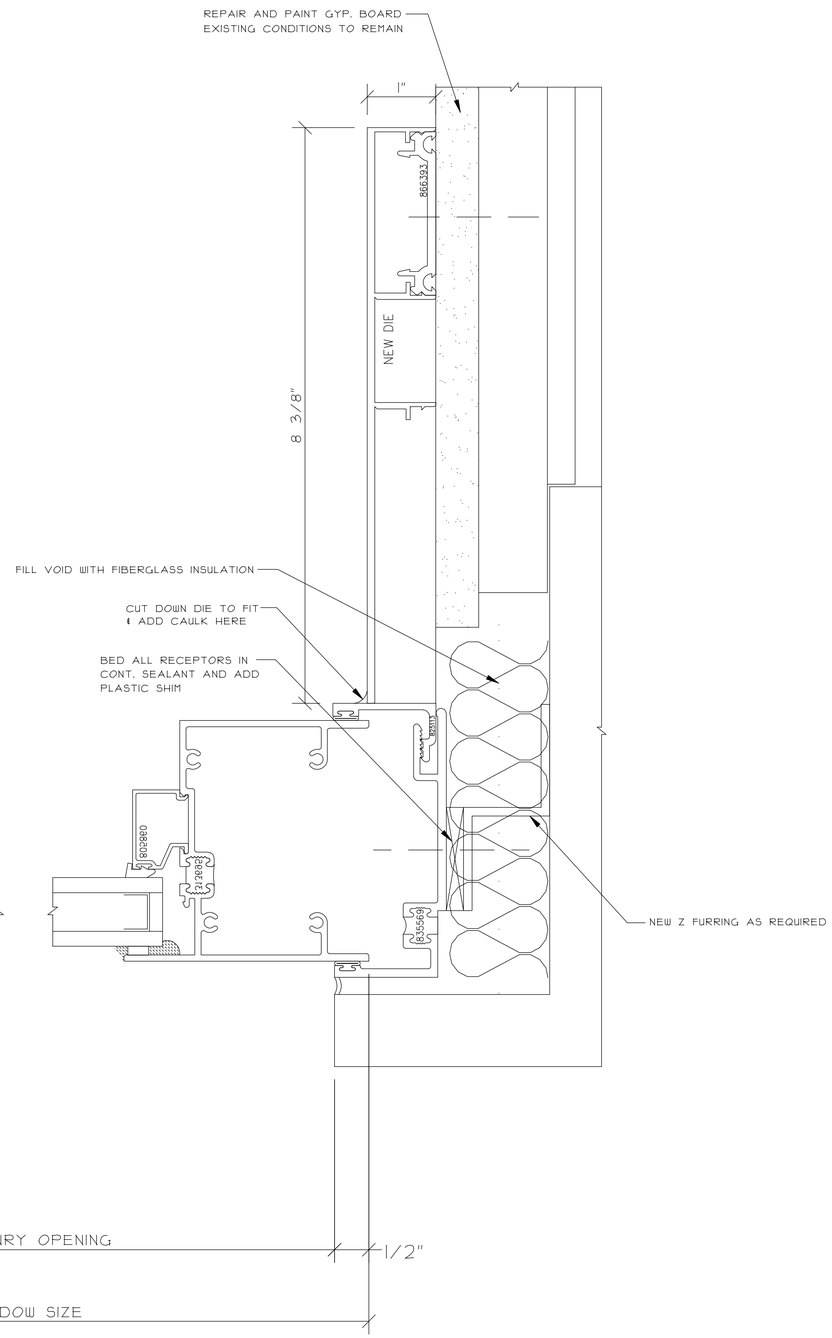

2 FIXED UPPER JAMB
REF. C8/A300

NO.	REVISION DESCRIPTION / ACTION TAKEN	BY	DATE

CONSTRUCTION MANAGER:

ARCHITECT INFO:

PROJECT INFO:

THIS DRAWING, INCLUDING THE INFORMATION, DATA, AND DESIGN IS CONFIDENTIAL AND THE PROPERTY OF AJAY GLASS. IT MAY NOT BE COPIED, REPRODUCED OR ITS CONTENTS DIVULGED WITHOUT THE WRITTEN PERMISSION OF AJAY GLASS CO.

TITLE
WINDOW WALL DETAILS

DRAWN BY / DATE
SAMPLE

CHECKED BY / DATE

AJAY PROJECT MANAGER:

SCALE:
12" = 1'-0"

AJAY PROJECT NO.:

DWG NO.:
460

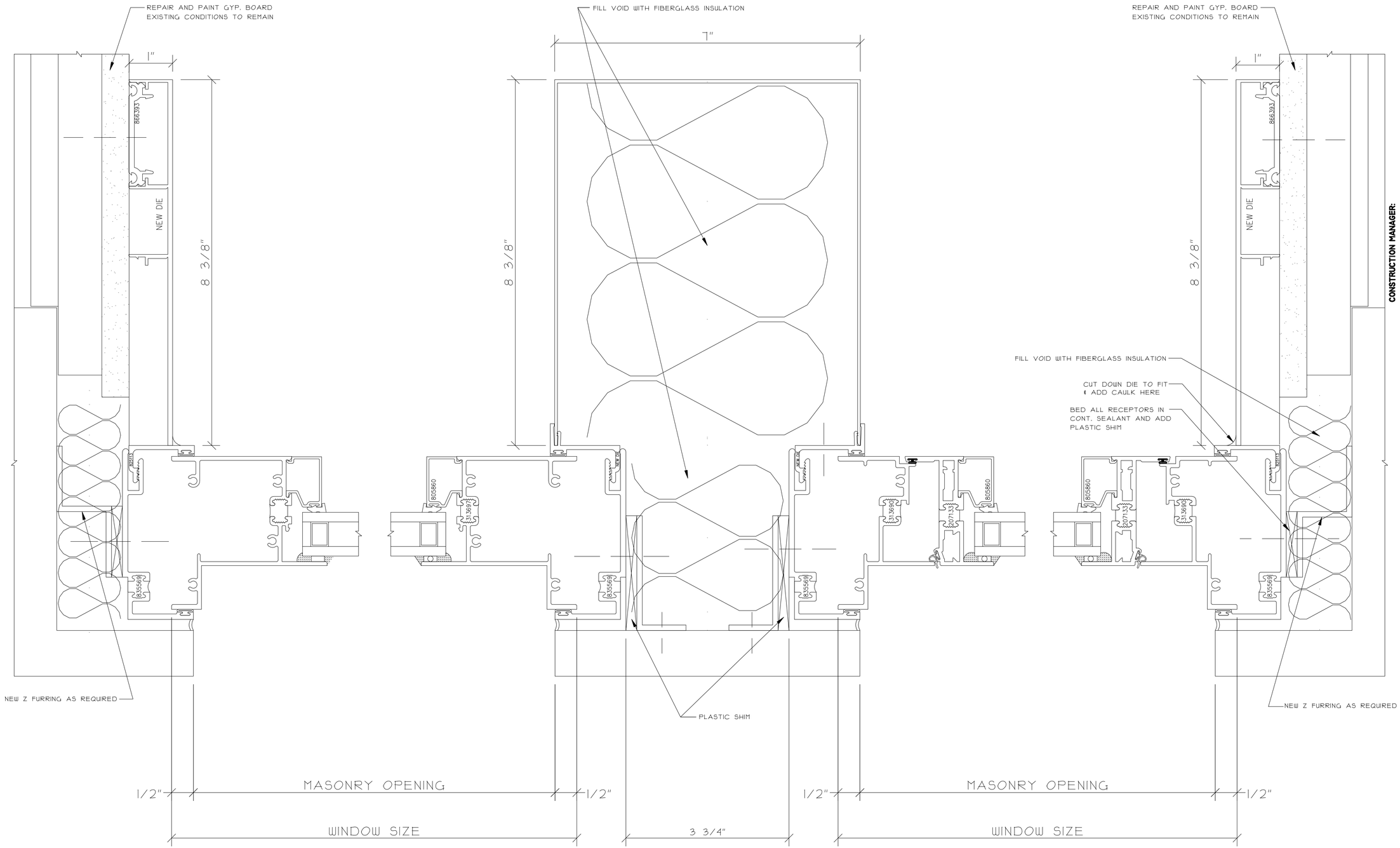

1 FIXED LOWER JAMB

2 FIXED/OPERABLE LOWER COLUMN JAMB
REF. C10/A300

3 OPERABLE JAMB
REF. C12/A300

NO.	REVISION DESCRIPTION / ACTION TAKEN	BY	DATE

CONSTRUCTION MANAGER:

CONSTRUCTION MANAGER:

ARCHITECT INFO:

PROJECT INFO:

THIS DRAWING INCLUDING THE INFORMATION, DATA AND DESIGN IS CONFIDENTIAL AND THE PROPERTY OF AJAY GLASS CO. IT IS NOT TO BE COPIED, REPRODUCED OR ITS CONTENTS DIVULGED WITHOUT THE WRITTEN PERMISSION OF AJAY GLASS CO.

TITLE
WINDOW WALL DETAILS

DRAWN BY / DATE
SAMPLE

CHECKED BY / DATE

AJAY PROJECT MANAGER:

SCALE:
12" = 1'-0"

AJAY PROJECT NO.:

DWG NO.:
461

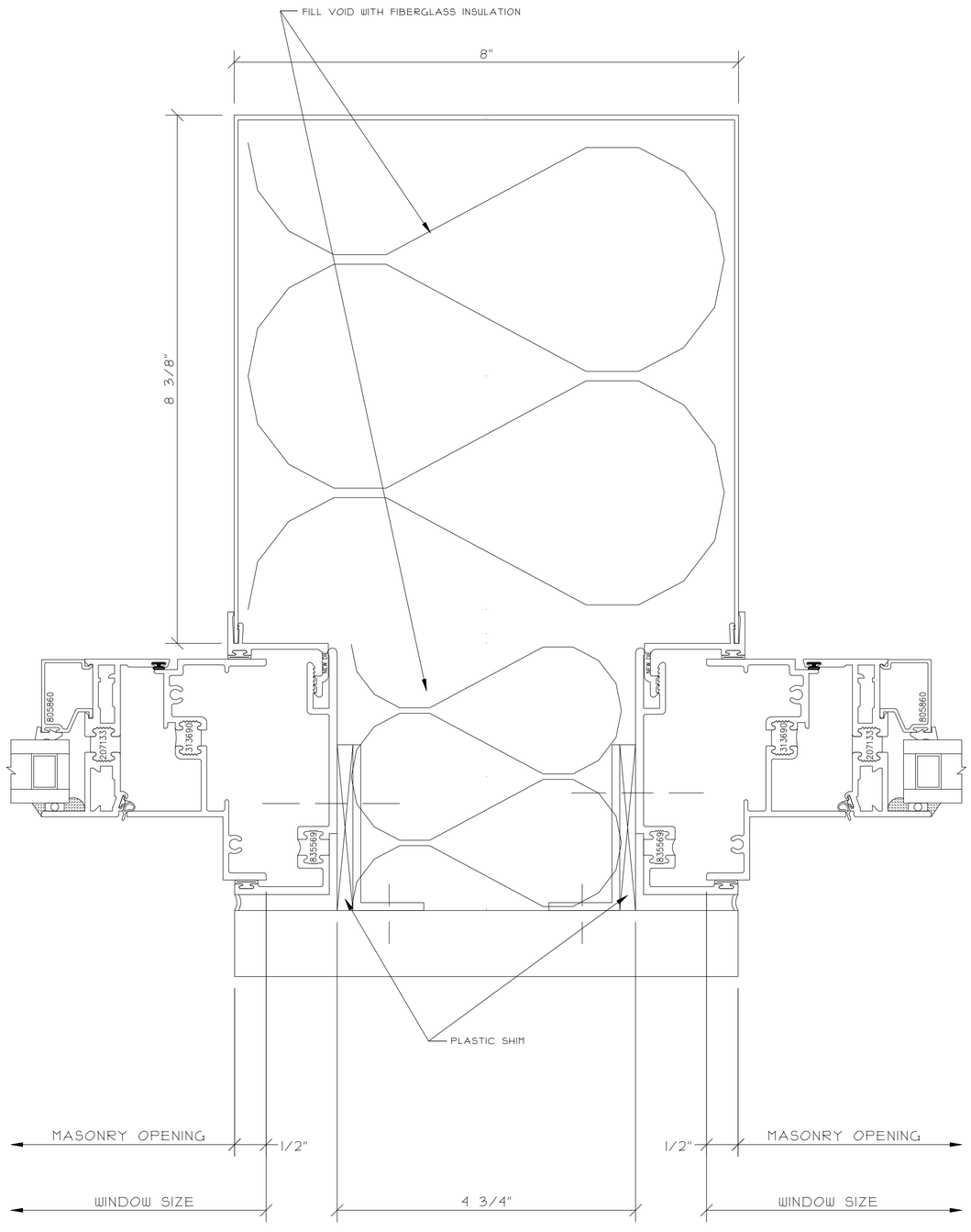

1 OPERABLE LOWER COLUMN JAMB
REF. C10/A300

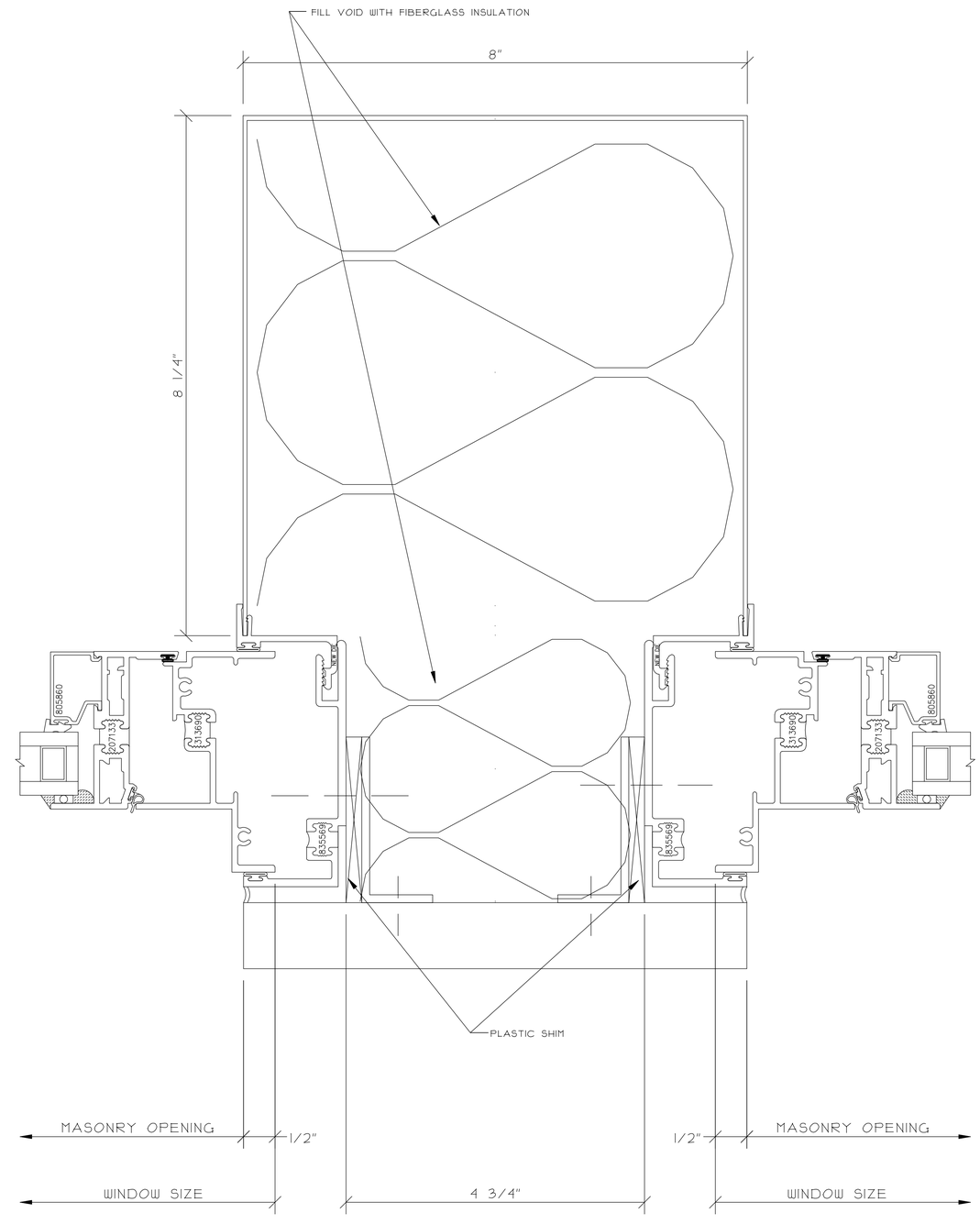

2 OPERABLE LOWER COLUMN JAMB
REF. C10/A300

NO.	REVISION DESCRIPTION / ACTION TAKEN	BY	DATE

CONSTRUCTION MANAGER:

ARCHITECT INFO:

PROJECT INFO:

THE DRAWING INCLUDING THE INFORMATION, DATA AND DESIGN IS CONFIDENTIAL AND THE PROPERTY OF AJAY GLASS CO. IT MUST BE STRICTLY KEPT CONFIDENTIAL AND ITS CONTENTS DIVULGED WITHOUT THE WRITTEN PERMISSION OF AJAY GLASS CO.

TITLE: WINDOW WALL DETAILS

DRAWN BY / DATE: SAMPLE

CHECKED BY / DATE:

AJAY PROJECT MANAGER:

SCALE: 12" = 1'-0"

AJAY PROJECT NO.:

DWG NO.: 462