PROJECT TITLE 1111 STREET CITY STATE

NOTES:

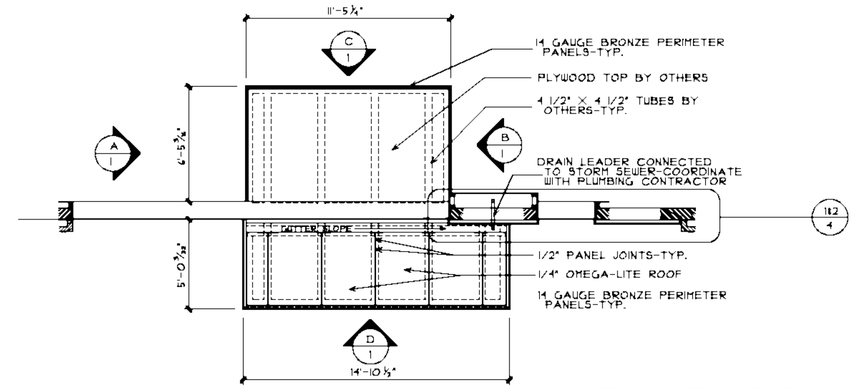

TOP VIEW OF CANOPY

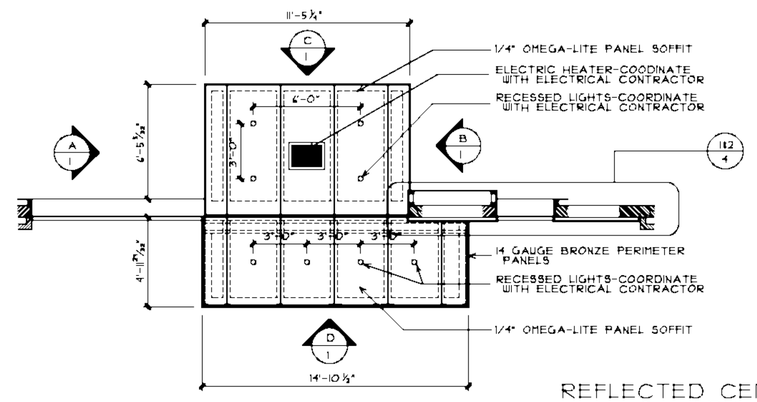

REFLECTED CEILING PLAN AT CANOPY

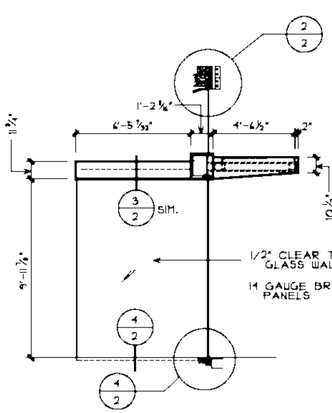

LEFT ELEVATION "A"

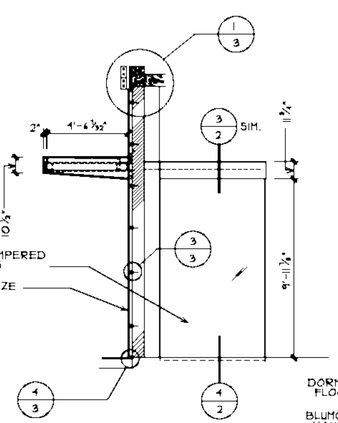

RIGHT ELEVATION "B"

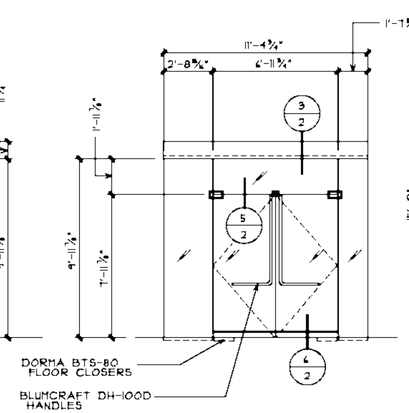

INTERIOR ELEVATION "C"

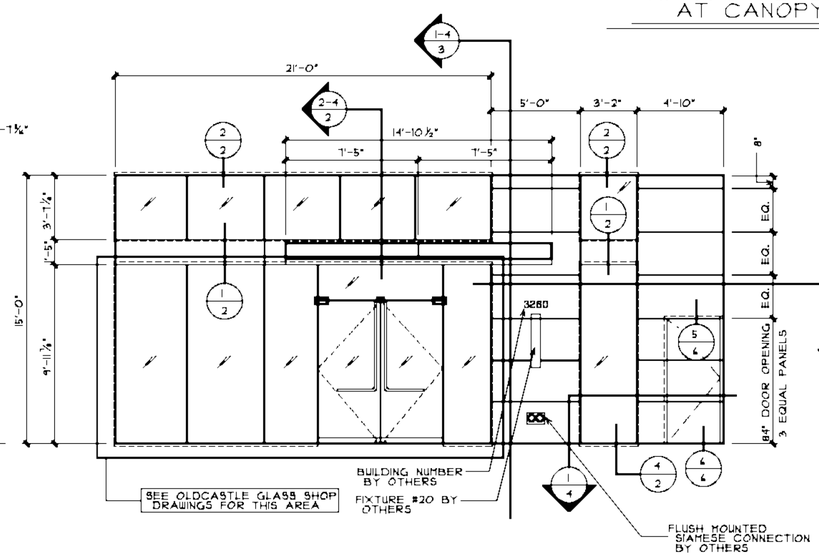

FRONT ELEVATION "D"

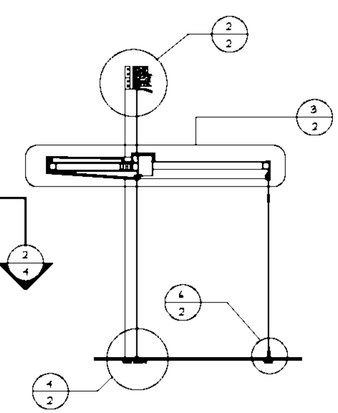

CANOPY/VEST. SECTION

GLAZING CONTRACTOR:	SAMPLE SAMPLE SAMPLE SAMPLE SAMPLE SAMPLE SAMPLE SAMPLE
ARCHITECT:	SAMPLE SAMPLE SAMPLE SAMPLE SAMPLE SAMPLE SAMPLE SAMPLE
PROJECT:	SAMPLE SAMPLE SAMPLE SAMPLE
LOCATION:	SAMPLE SAMPLE SAMPLE SAMPLE
SCALE:	SAMPLE
DATE:	SAMPLE
PAGE:	1 OF 5