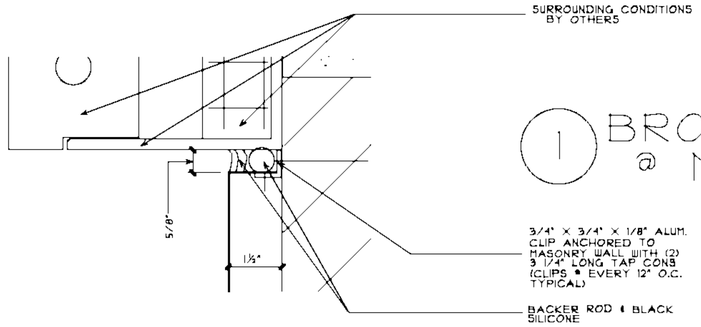

1 BRONZE PANEL @ MASONRY

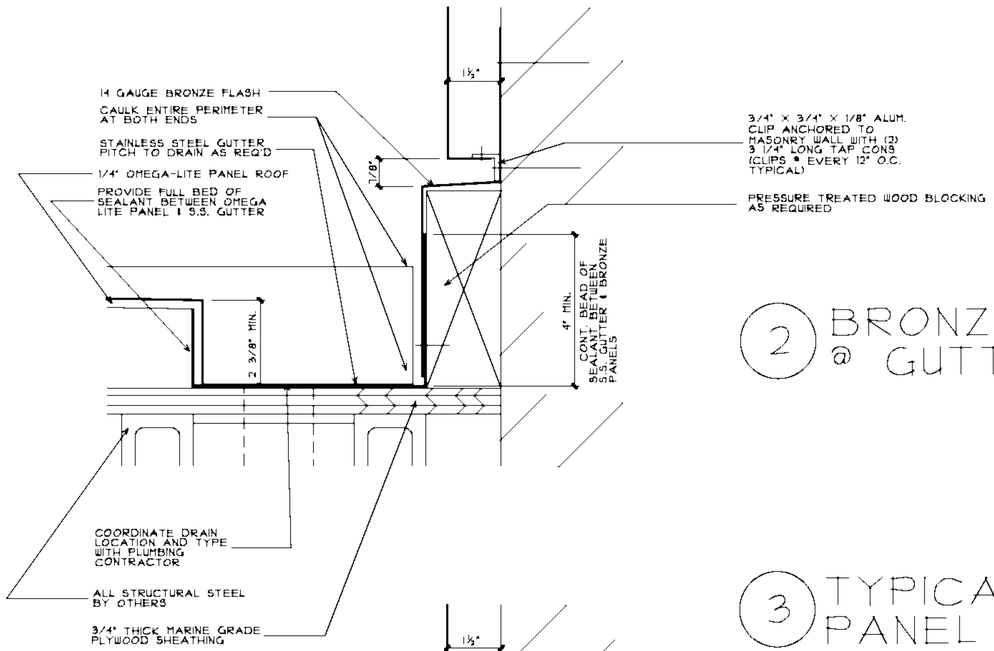

2 BRONZE PANEL @ GUTTER

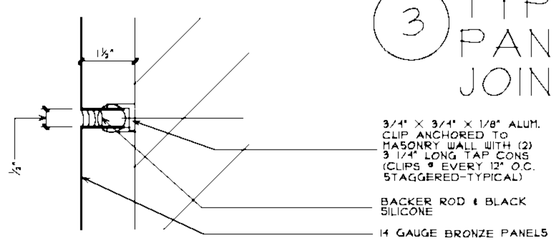

3 TYPICAL BRONZE PANEL HORIZONTAL JOINT

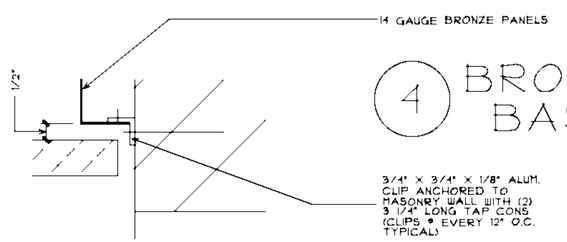

4 BRONZE PANEL BASE

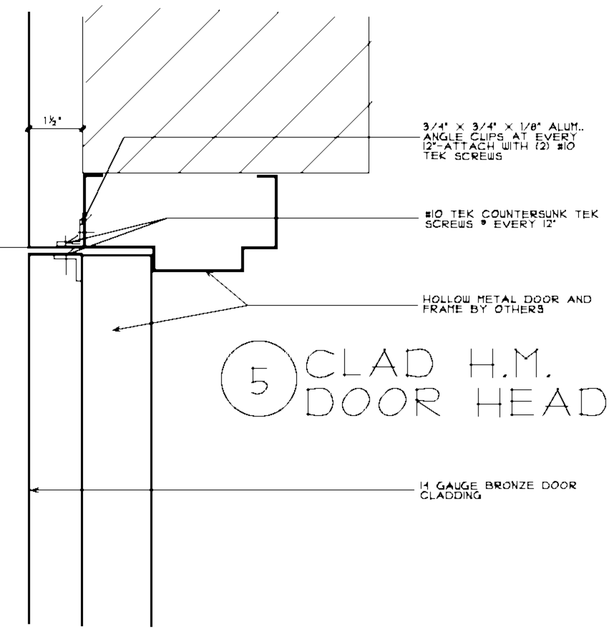

5 CLAD H.M. DOOR HEAD

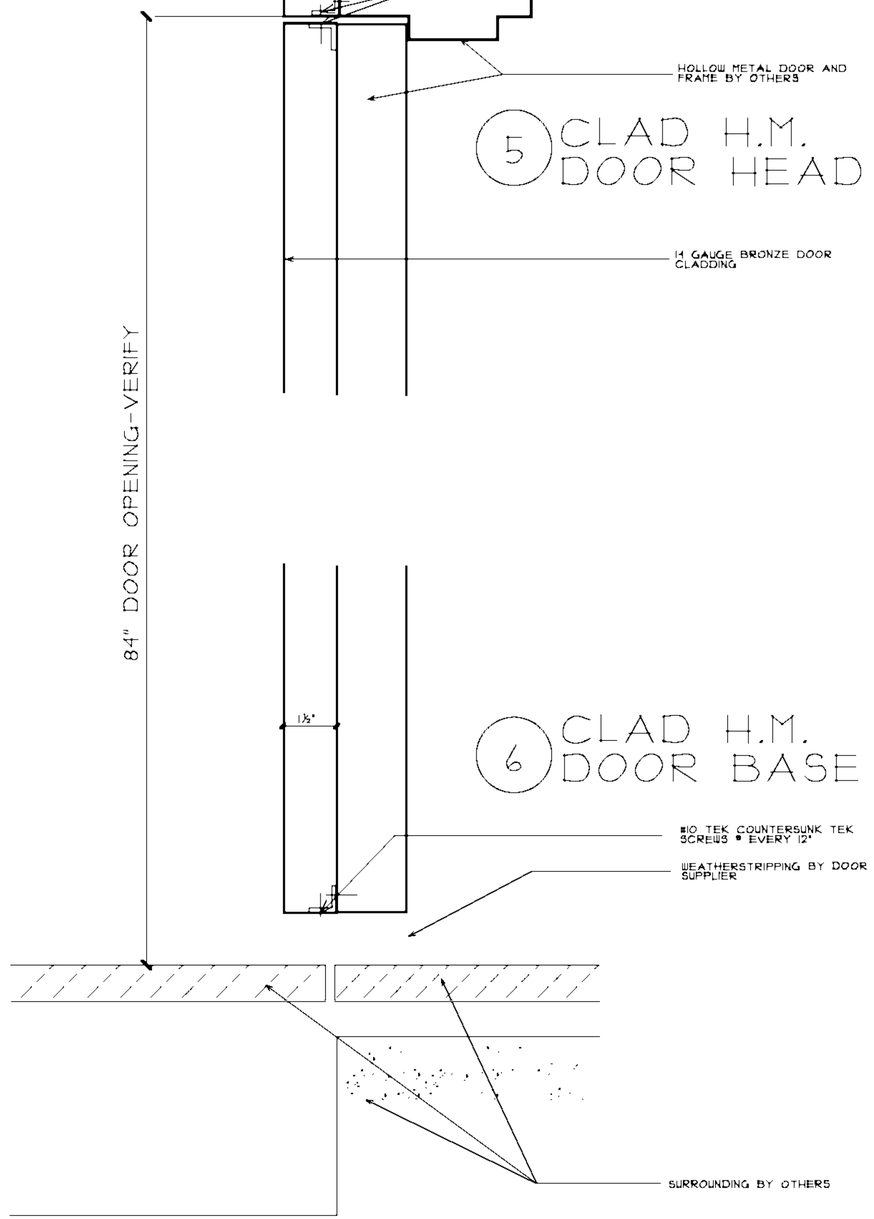

6 CLAD H.M. DOOR BASE

GLAZING CONTRACTOR: SAMPLE SAMPLE SAMPLE SAMPLE SAMPLE SAMPLE SAMPLE SAMPLE

ARCHITECT: SAMPLE SAMPLE SAMPLE SAMPLE SAMPLE SAMPLE SAMPLE SAMPLE

PROJECT: SAMPLE SAMPLE SAMPLE SAMPLE

LOCATION: SAMPLE SAMPLE SAMPLE SAMPLE

SCALE: SAMPLE

DATE: SAMPLE

PAGE: 6 OF 6