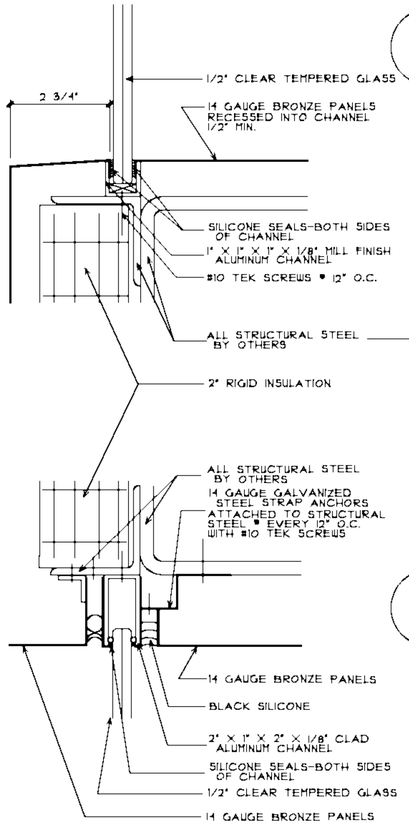

1 BASE @ CLAD BEAM

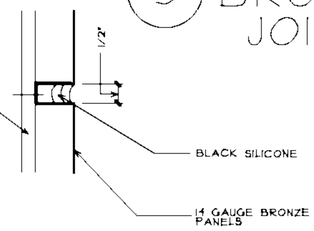

3 BRONZE PANEL JOINT

2 HEAD @ CLAD BEAM

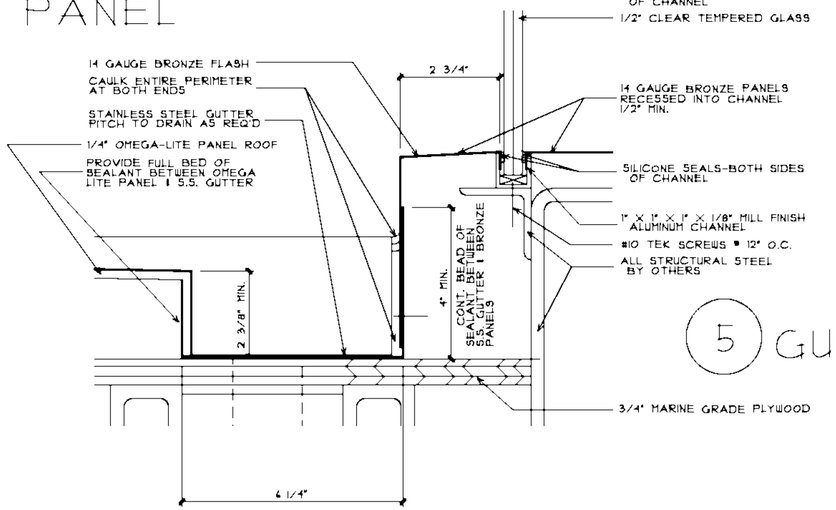

5 GUTTER

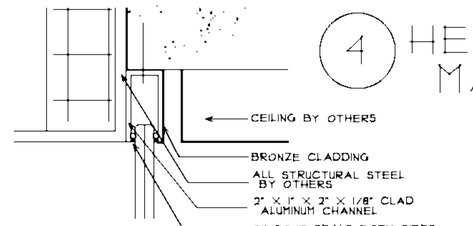

4 HEAD @ MASONRY

8 HEAD @ INTERIOR

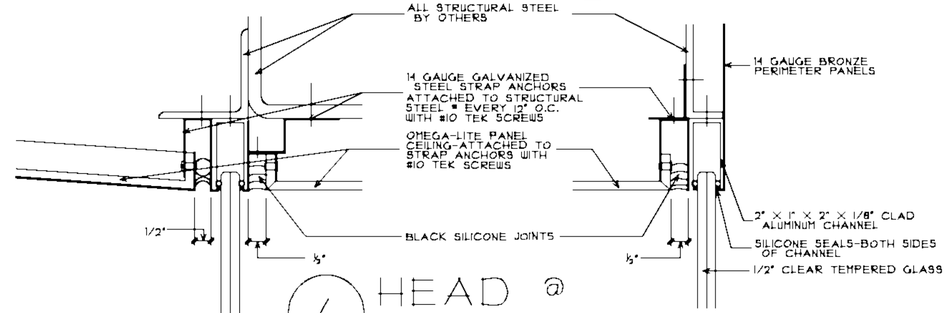

6 HEAD @ EXTERIOR

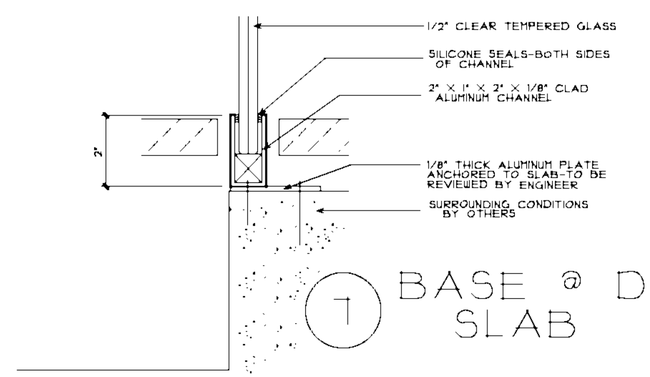

7 BASE @ DROPPED SLAB

GLAZING CONTRACTOR: SAMPLE SAMPLE SAMPLE SAMPLE SAMPLE SAMPLE SAMPLE SAMPLE

ARCHITECT: SAMPLE SAMPLE SAMPLE SAMPLE SAMPLE SAMPLE SAMPLE SAMPLE

PROJECT: SAMPLE SAMPLE SAMPLE SAMPLE

LOCATION: SAMPLE SAMPLE SAMPLE SAMPLE

SCALE: SAMPLE

DATE: SAMPLE

PAGE: 5 OF 6